V1.1 01/20/2026

Manual for Vego Pacific Greenhouse 10.5 X 12.5 ft.

Copyright @ 2025 Vego

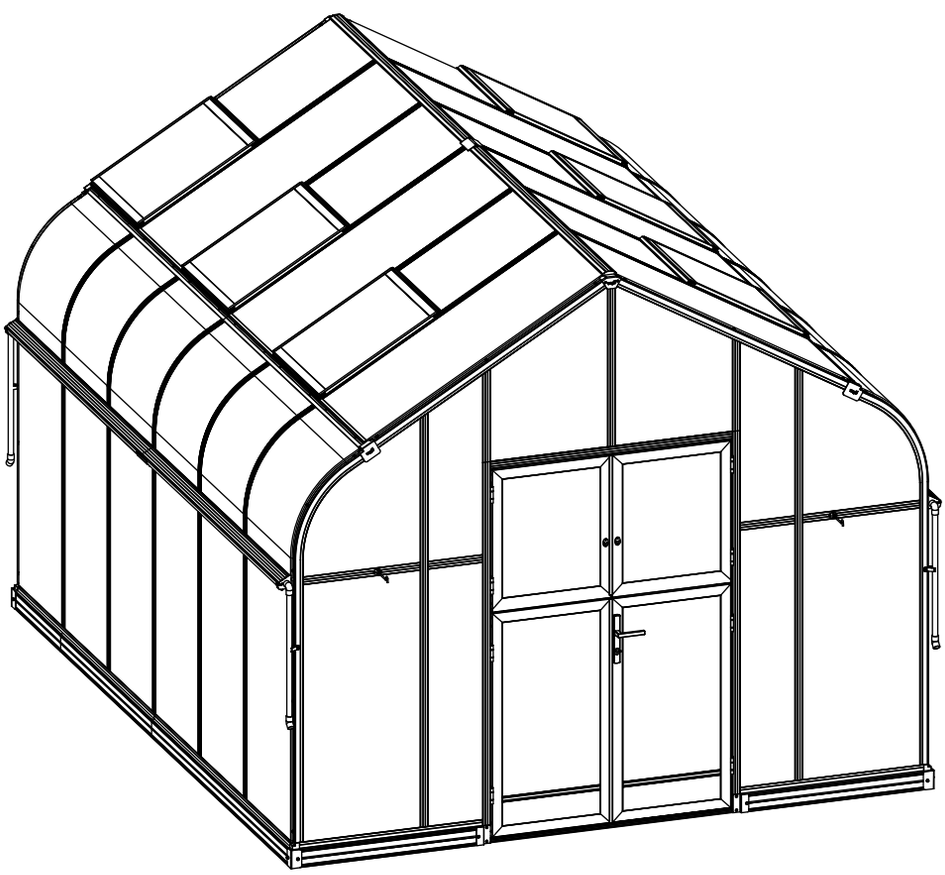

vegogarden.com

Model:
VGHP1012PCBK

Dimensions:
10.5’ X 12.5’ X 9.1’ (H)

CONTENTS

Safety Advice 03

Tools & Packing Information 03

Assembly & Maintenance 06

Foundation Assembly 08

Wall Assembly 20

Louvered Window Assembly 63

Roof Assembly 69

Vent Assembly 78

Auto Vent Opener Assembly 89

Door Assembly 94

End Cap Installation 107

Safety Advice

1. This product is designed to be used as a greenhouse.
2. It is important to assemble the product according to this manual, do not skip or modify any steps.
3. Wear gloves, shoes and safety glasses during assembling to avoid injury.
4. Do not climb or stand on the roof.
5. Keep children away from the assembly area.
6. Do not assemble the product in windy, wet or bad weather conditions.
7. Do not assemble the product under the influence of medication, alcohol or drugs.

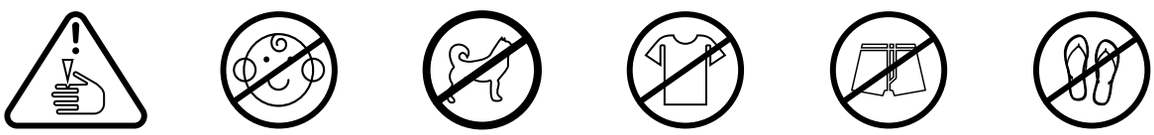

Tools & Packing Information

● Tools Provided

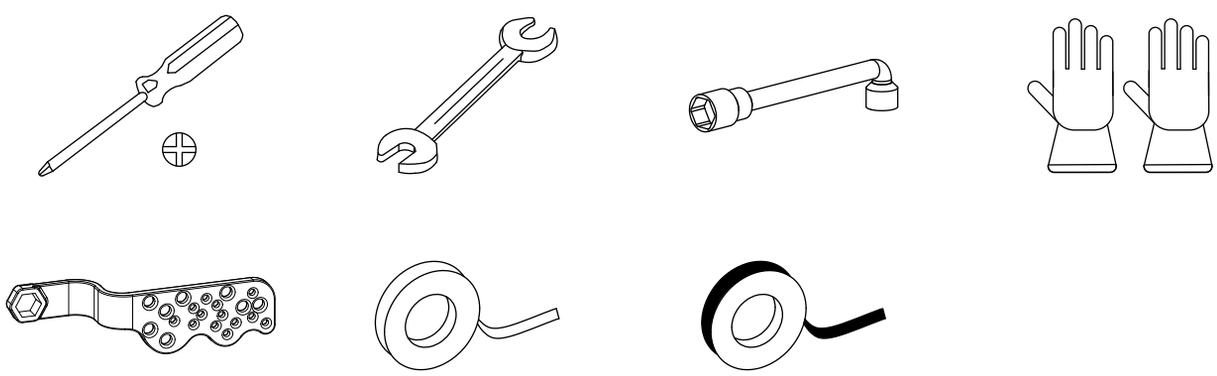

● Tools Required (Not Provided)

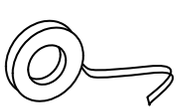

Painter's tape

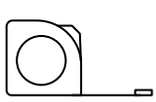

Tape measure

Scissors

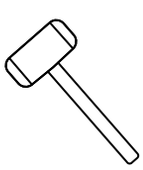

Rubber mallet

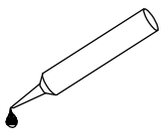

Silicone Caulk

Level

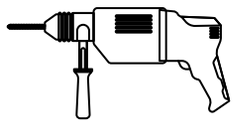

Hammer drill +
25/64 Drill bit
5/16" Drill bit

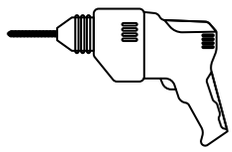

Cordless driver
- Philips head

6ft Ladder

● 3+ Person Assembly

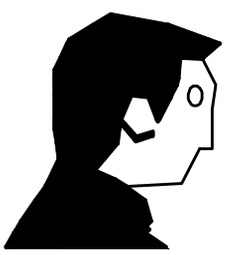

3+

vegogarden.com

● Packing Information

Aluminum Frame & Hardware:

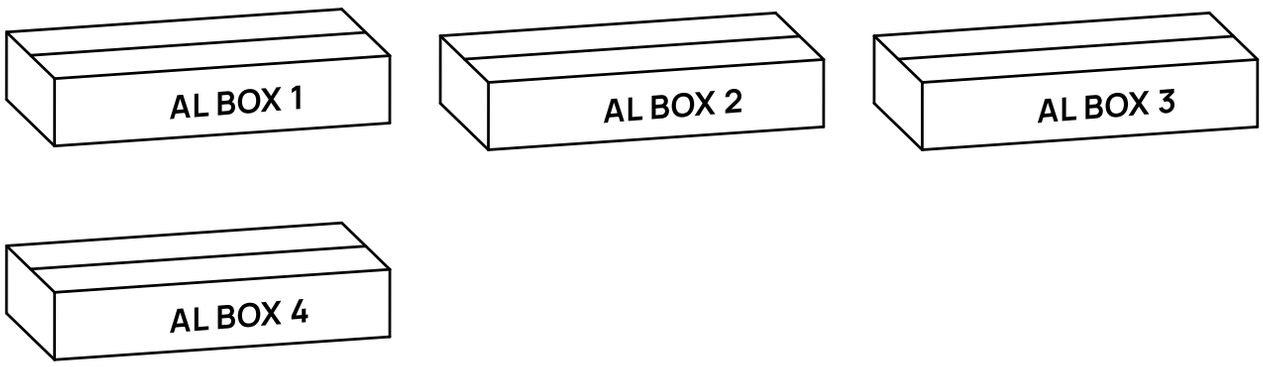

Polycarbonate Panels:

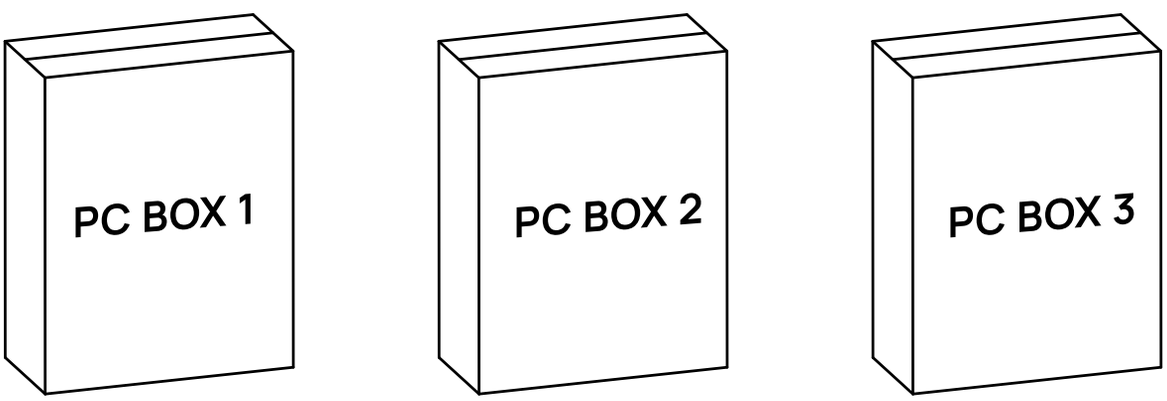

Packing List:
Please refer to documents provided in the boxes.

Assembly & Maintenance

1. Place the parts on a soft surface to avoid scratches and damage.
2. Loosely tighten bolts as you assemble. After the greenhouse is built, and still loosely connected, tighten all bolts completely.

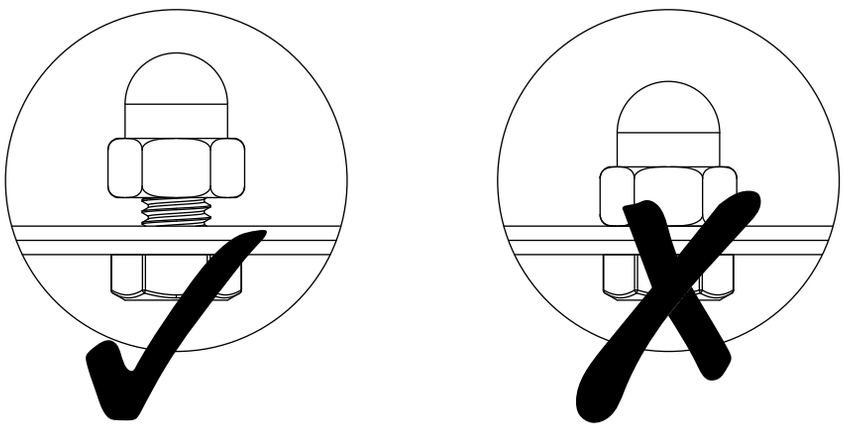

3. Keep the roof and gutters clear of snow, dirt and leaves in order to avoid damage to the product.
4. Clean the product with a mild soap and rinse with cold, clean water.
5. Do not use acetone, abrasive cleaners, or other special detergents to clean the product.
6. Remove the clear film prior to assembly. The white film indicates the UV-Protected side of the panels. Peel back the white film to expose only the edges (until the panels are in place) to ensure that the UV-Protected side is facing outwards in final assembly.

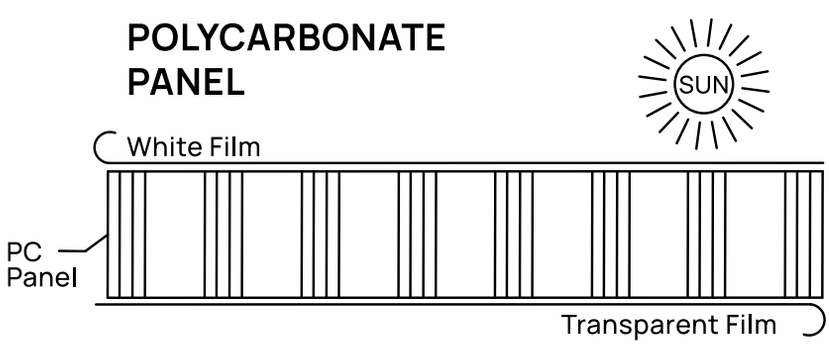

7. Cover the two cut edges of the PC panels with the provided H158/159 tape before installation to seal the channels & prevent moisture from getting trapped inside.

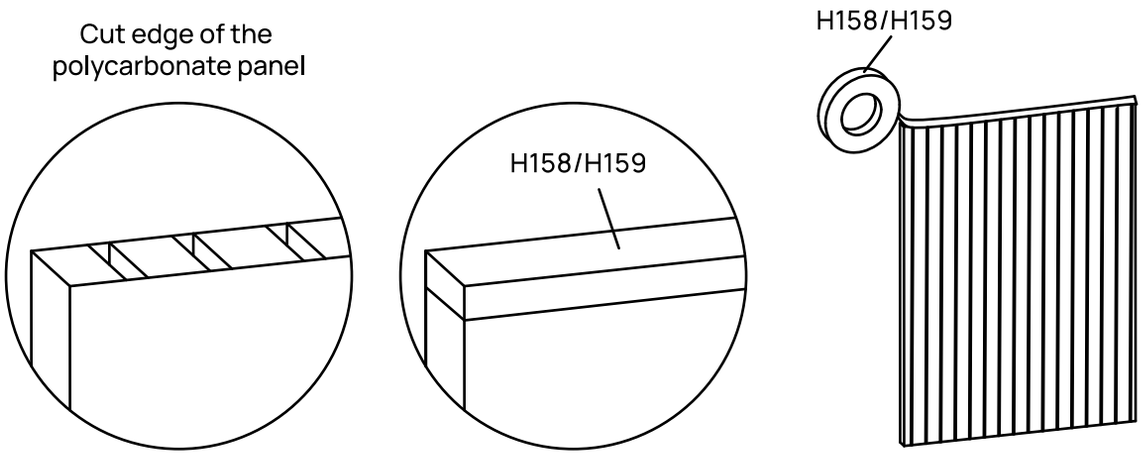

vegogarden.com

Foundation Assembly

STEP 01

Choose a hard, clean, level surface to position your greenhouse. If the selected area is not level, clear and level it before beginning.

● Option 1: Solid foundation

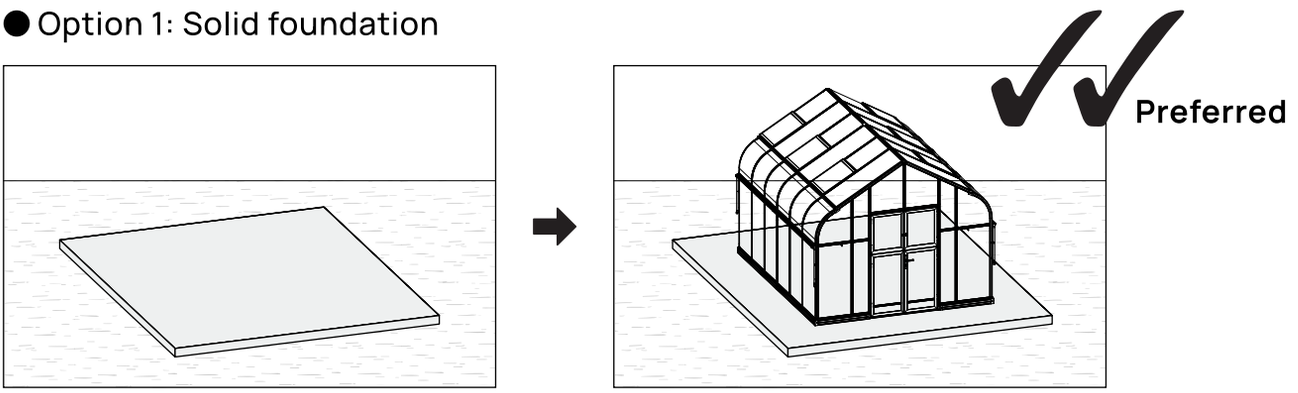

● Option 2: Solid frame

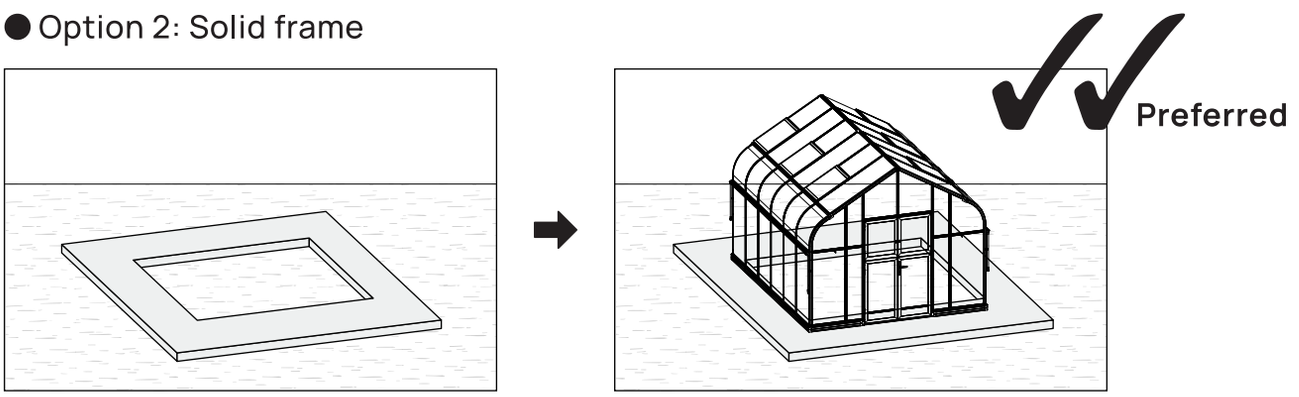

● Option 3: Firm ground / grass

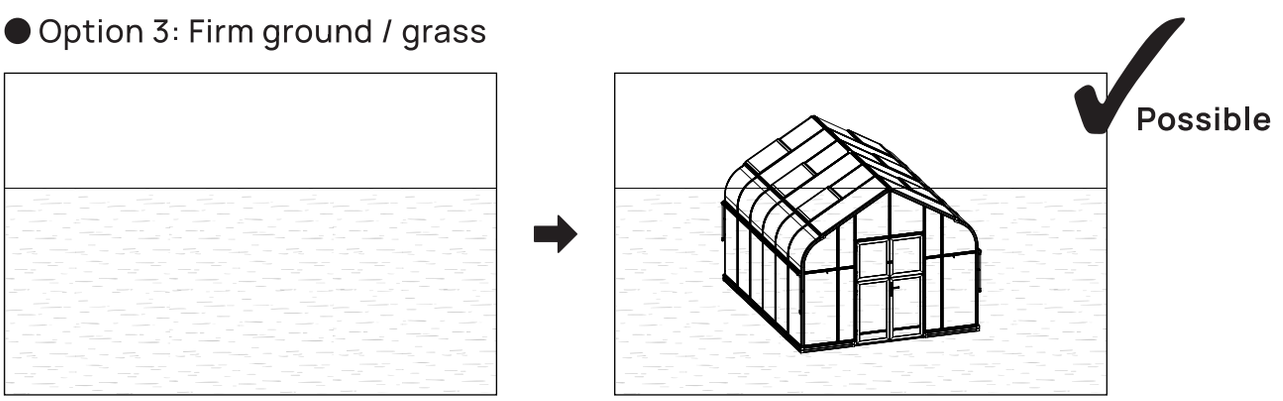

The size of the greenhouse displayed is for illustrative purposes only and may not reflect the size of your greenhouse.

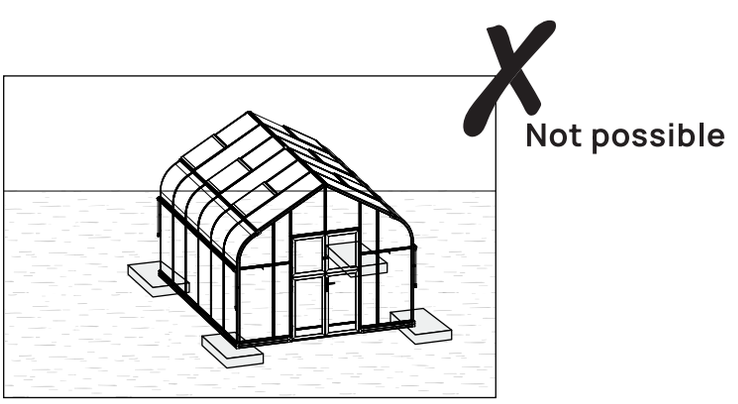

Foundation Dimensions

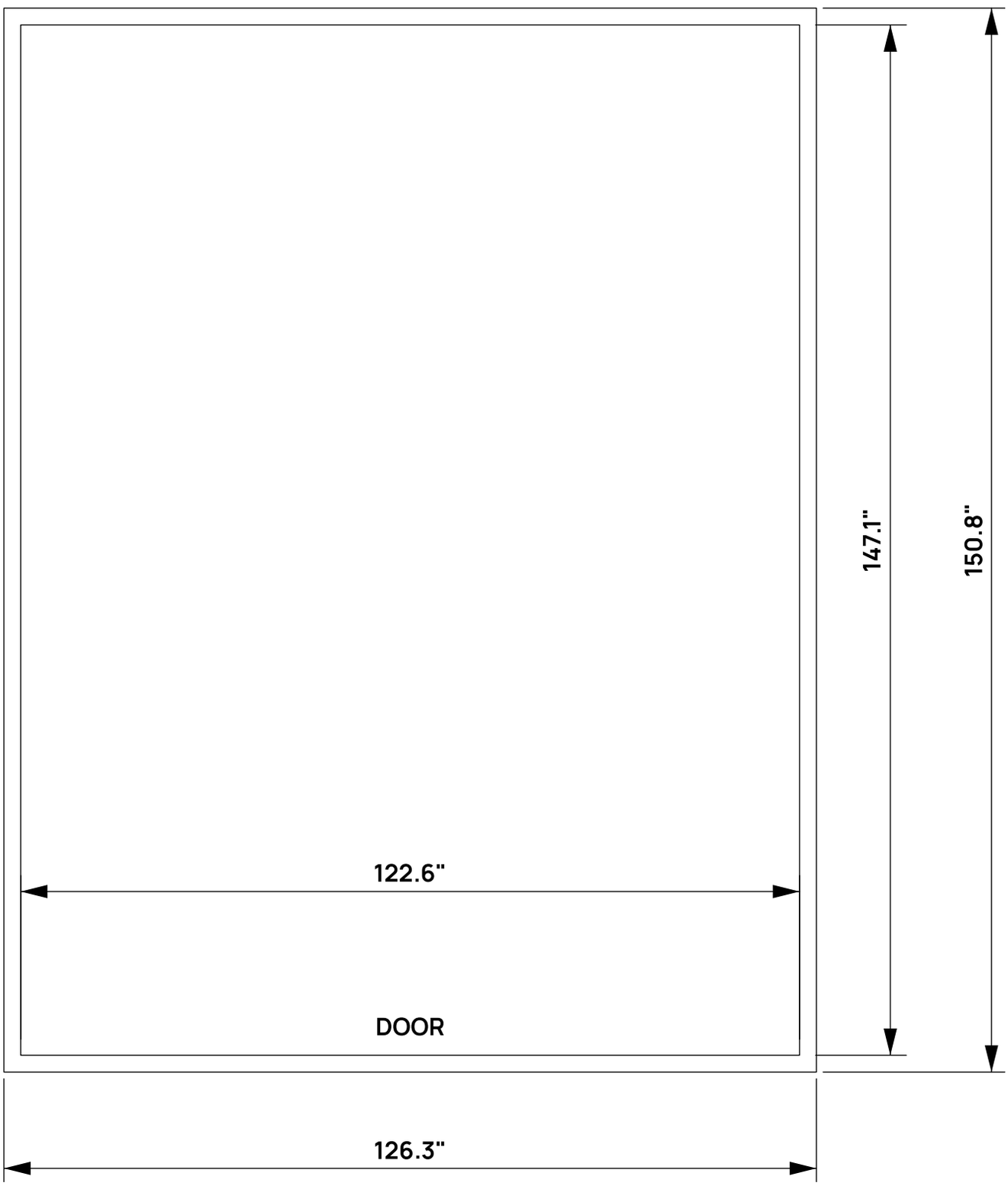

STEP

02

Lay out the foundation pieces as diagrammed, using the door location as a reference.

BOX	PART	NO	QTY
ALBOX-2	75IN	DJ01	5
ALBOX-3	51IN	DJ02	1
ALBOX-4	38IN	DJ05	2
ALBOX-4		D366	4
ALBOX-4		D73	4
ALBOX-4		D74	3
ALBOX-4		S03A M6X10	57
ALBOX-4		M24 M6	36

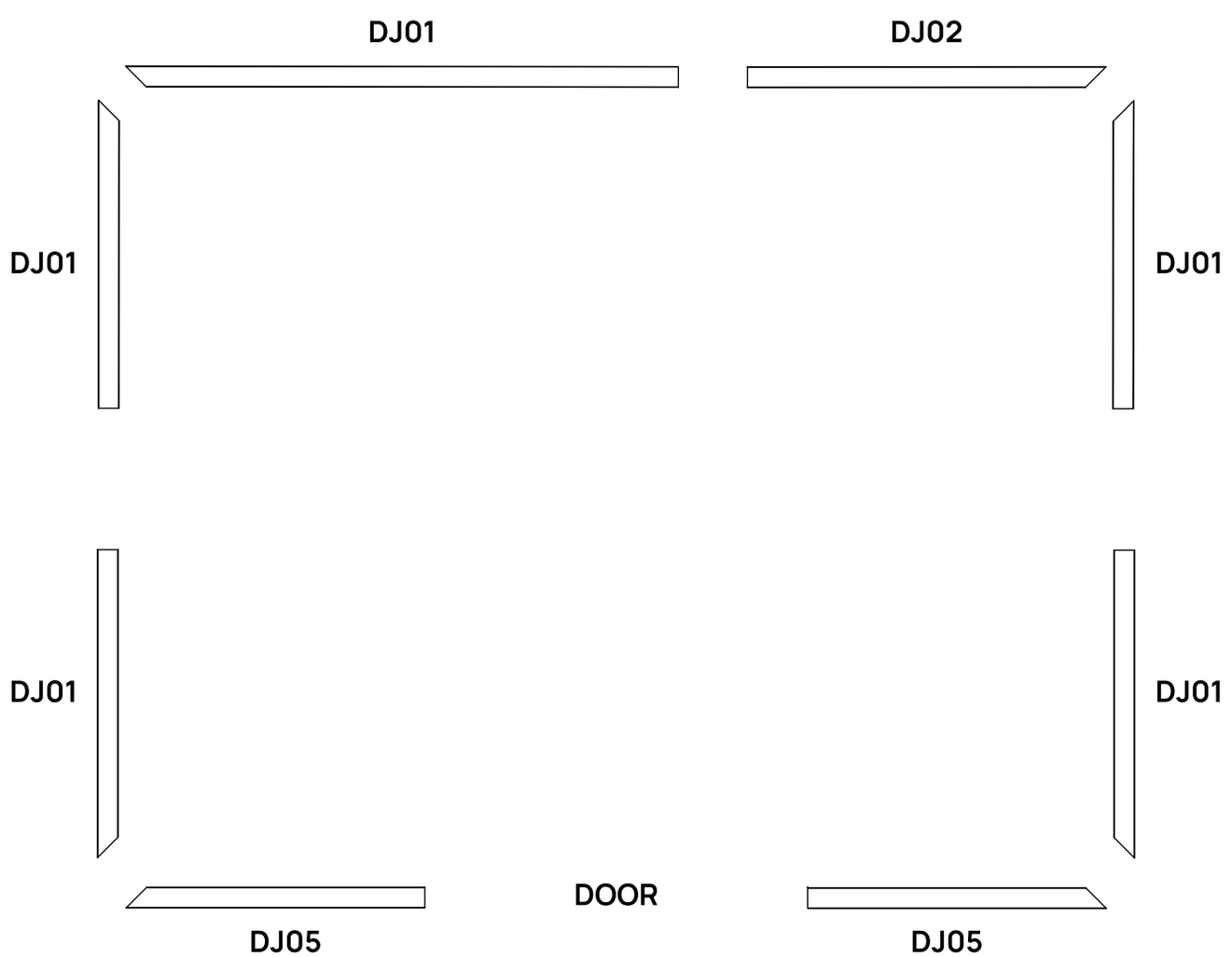

STEP

03

Slide the heads of S03A (x29) bolts in the grooves of the frame, on the inside and outside, as shown below. These will hold the outside connectors and anchor brackets.

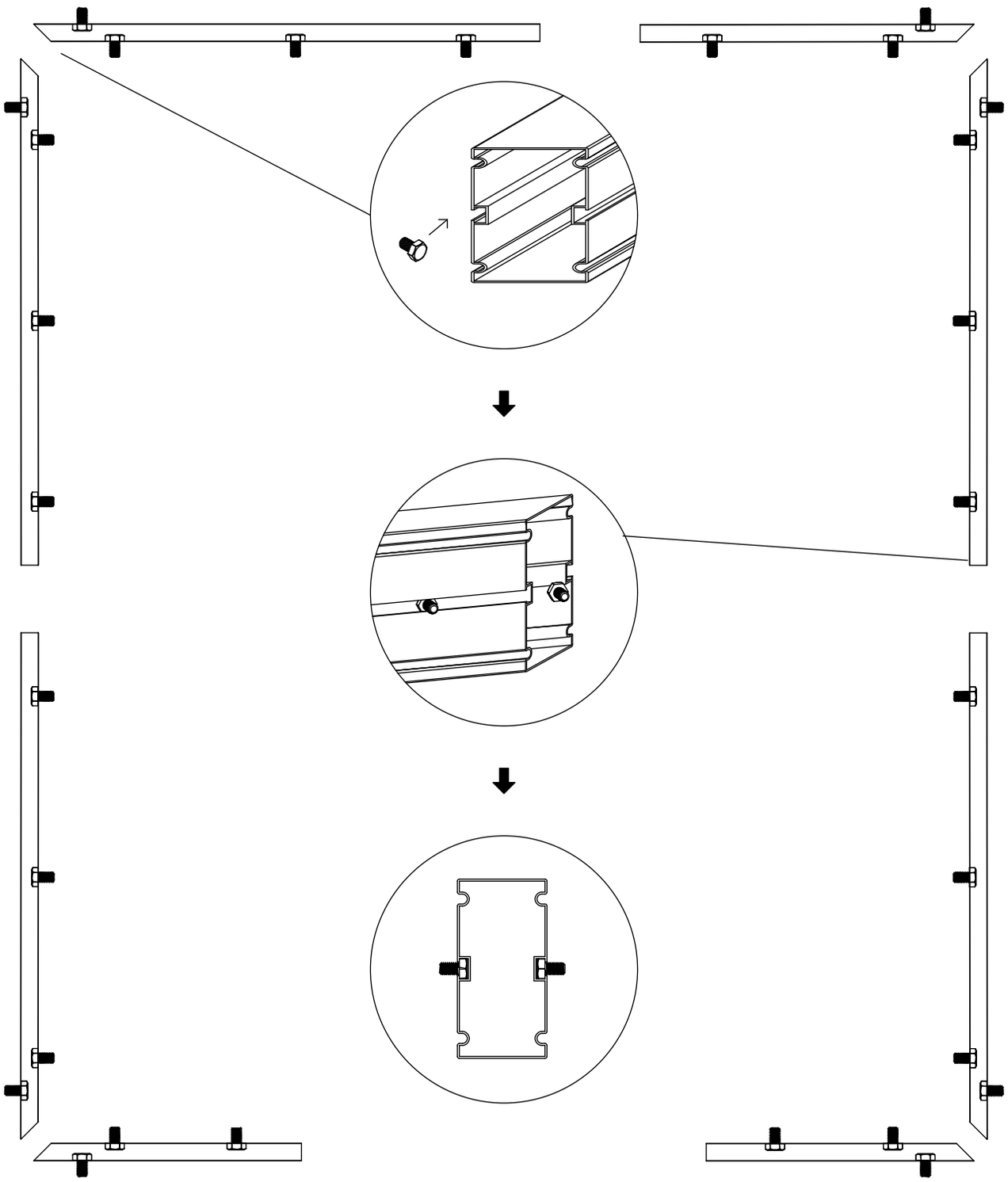

STEP

04

Assemble 3 sets of Z1 and 4 sets of Z2 connection plates by loosely installing the bolts and cap nuts.

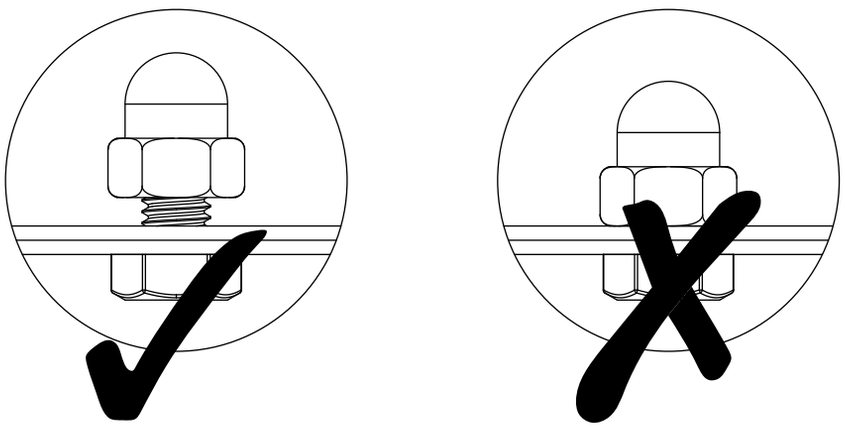

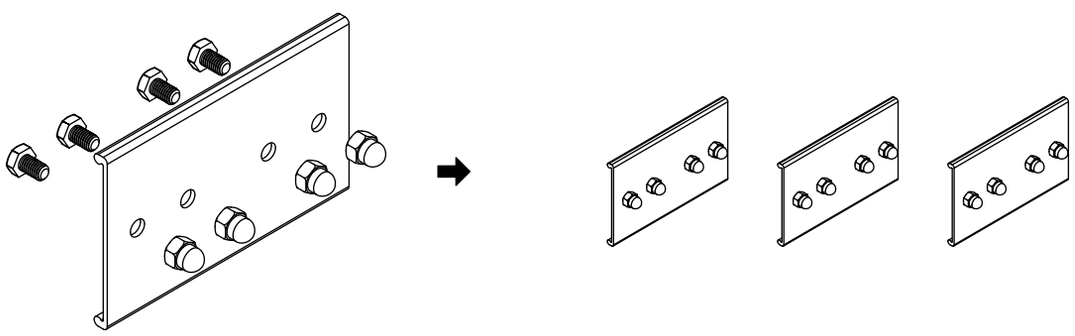

Z1 X 3

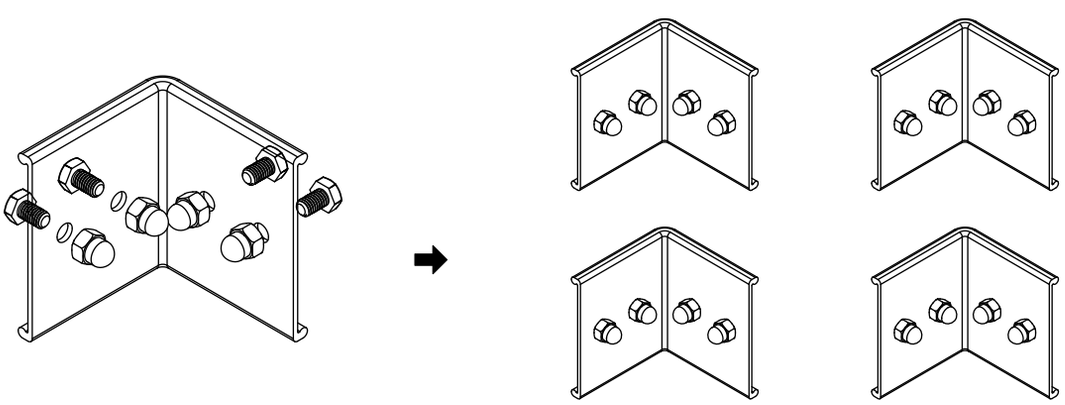

Z2 X 4

STEP

05

Slide Z1 & Z2 in the grooves of foundation pieces to connect each section and tighten the bolts until the frame is flush and square.

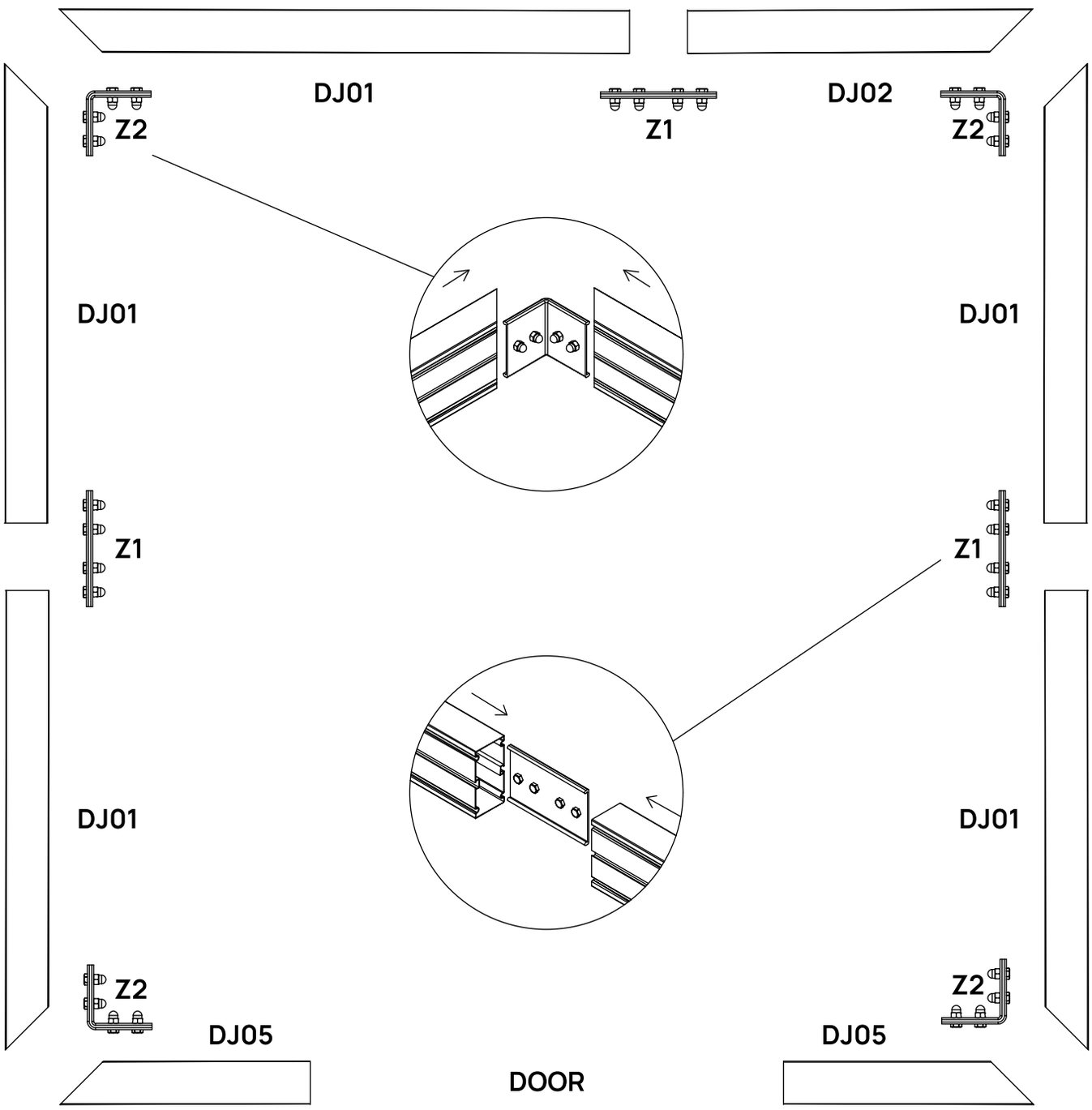

STEP

06

Connect the 4 corners with D366 L brackets using the previously installed S03A bolts. Secure with cap nuts.

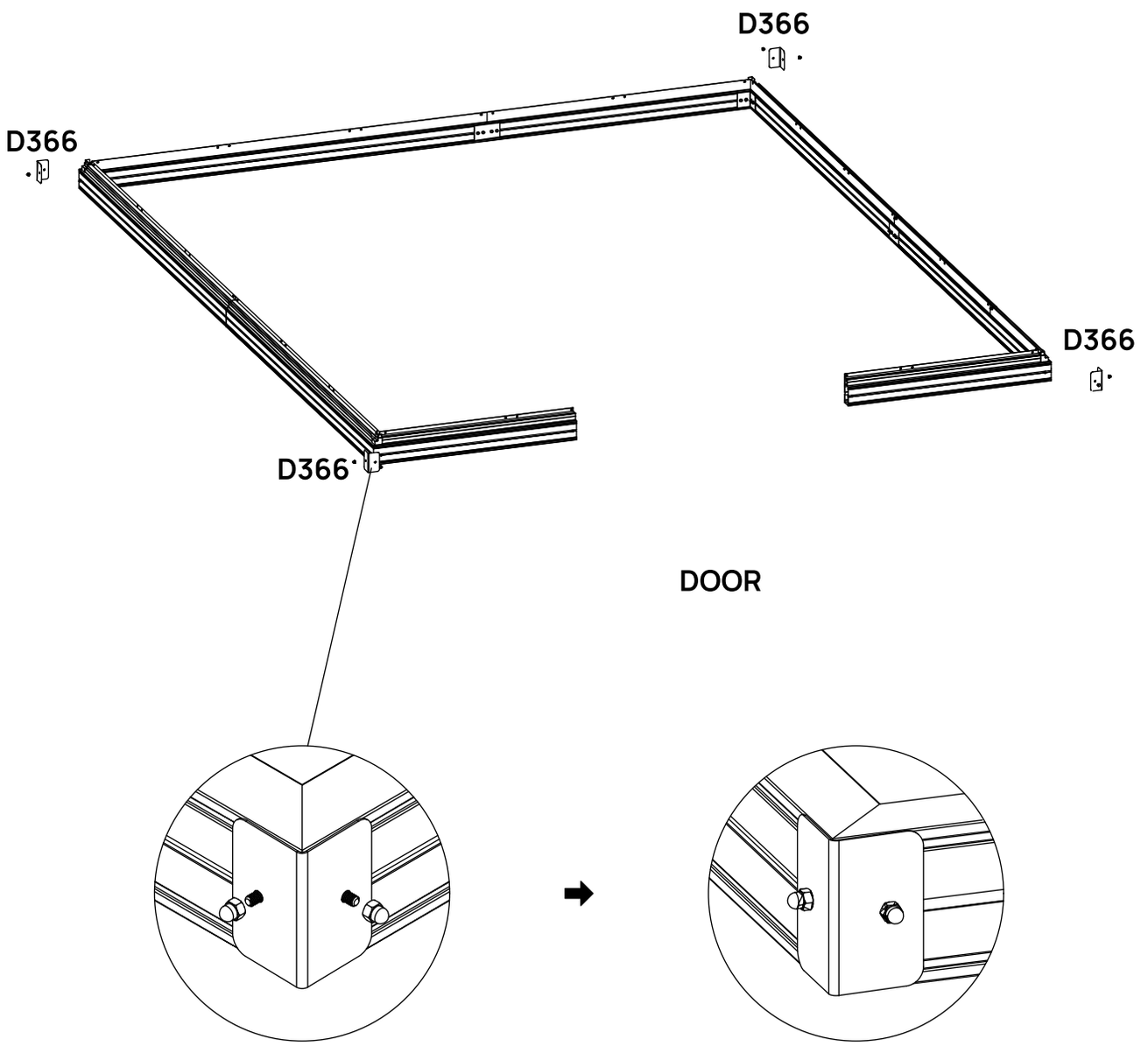

STEP

07

Lay out the base frame pieces as shown in the diagram, noting that there are two types of corner pieces.

BOX	PART	NO	QTY
ALBOX-3		L08A	1
ALBOX-2		L08B	2
ALBOX-2		L08C	2
ALBOX-4		L08J	1
ALBOX-4		L08K	1
ALBOX-2		L08L	1
ALBOX-3		J196L	2
ALBOX-4		J196R	2
ALBOX-4		D76	21
ALBOX-4		D75	21
ALBOX-4		M24 M6	21
ALBOX-4		S08A M8X60	21
ALBOX-4		Z13A Ø5X40	21
ALBOX-4	Ø6.5X16X1.2	H79	21

vegogarden.com

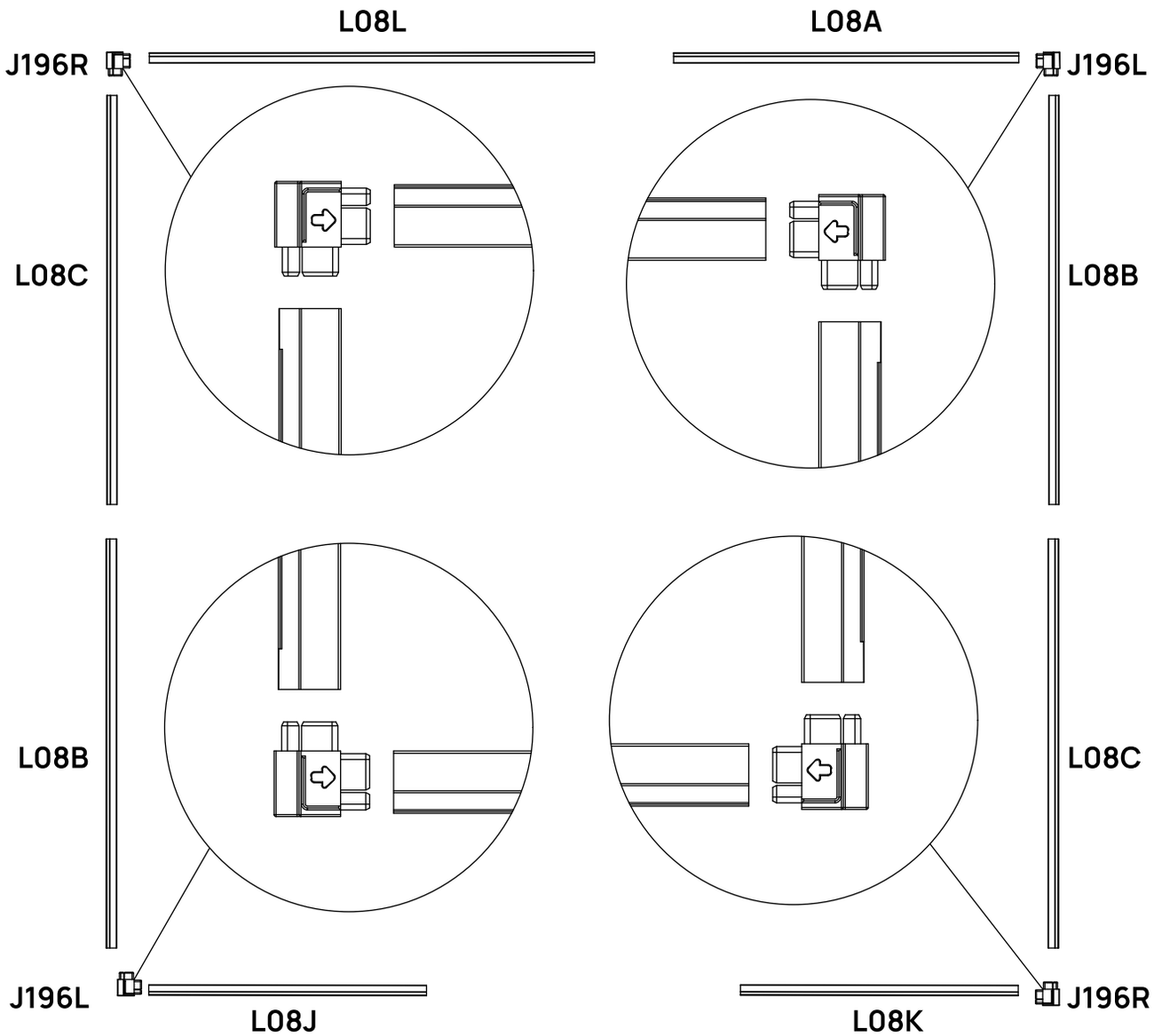
L08L
L08A
J196R
J196L
L08C
L08B
L08B
L08C
J196L
J196R
L08J
L08K

STEP

08

Mark 21 anchor holes on ground per the template below.

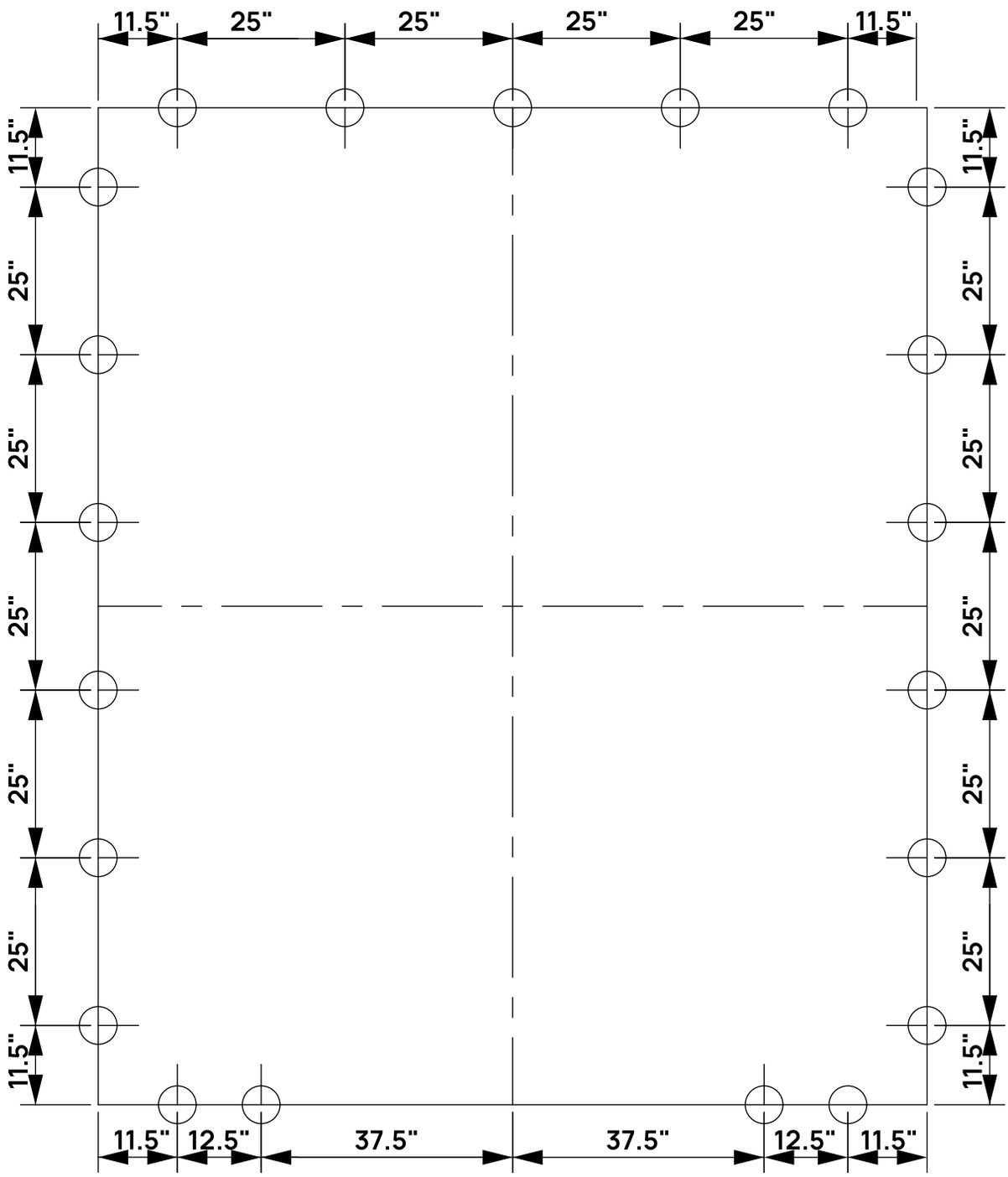

STEP

09

When connecting the base frame to the foundation frame, connect D75 and D76 brackets using the previously installed bolts and secure with cap nuts. Slide the assembled brackets over the marked anchor holes.

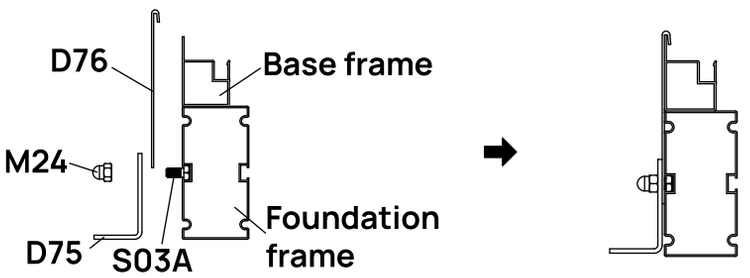

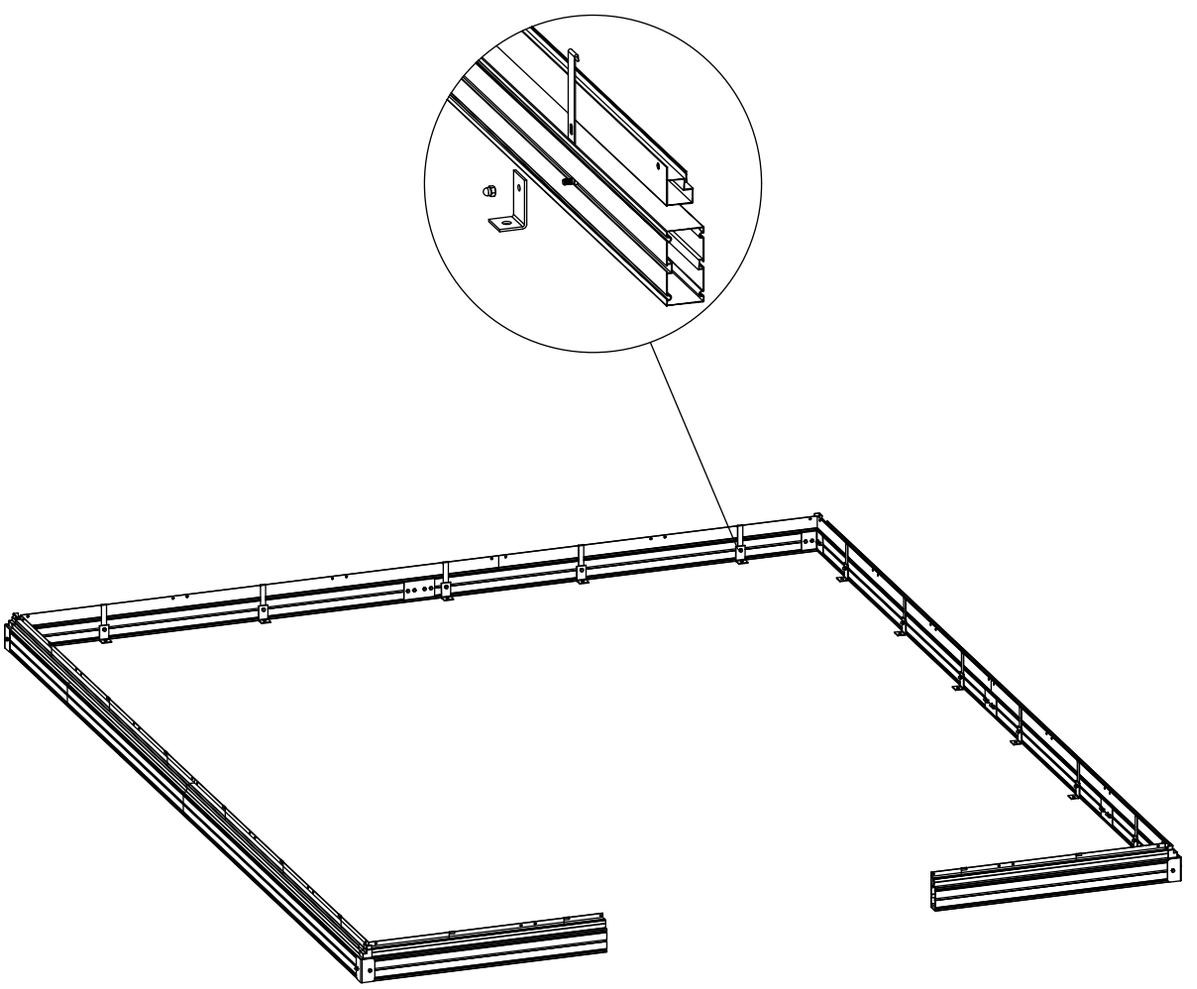

a. For wood surfaces, use Z13A wood screws and H79 washers to affix the base through the D75 bracket.

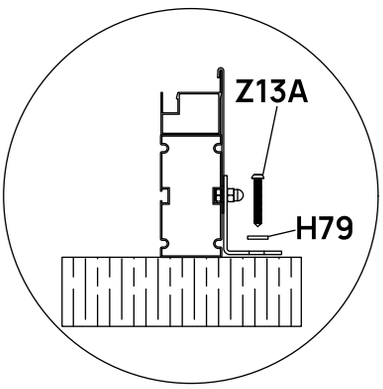

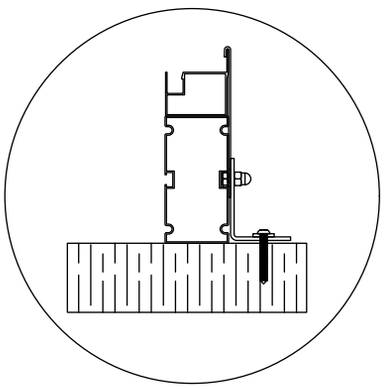

b. For cement surfaces, drill holes at a 2" depth with a hammer drill and 25/64" drill bit. Insert S08 expansion bolts into the holes, and attach D75 bracket using the included nuts.

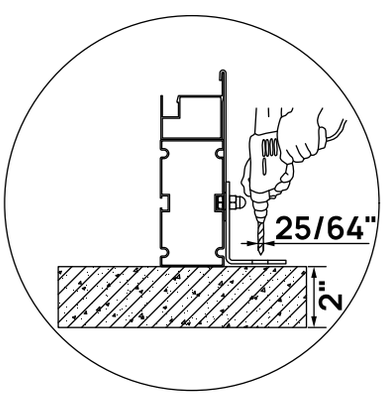

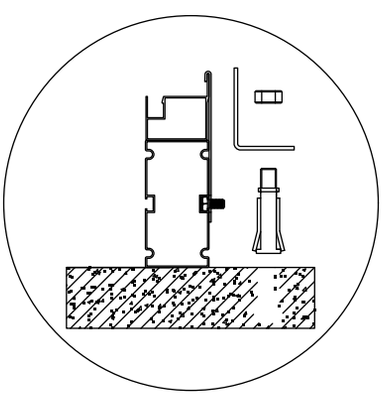

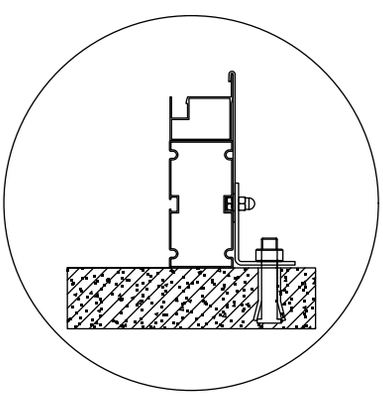

c. For bare ground installation, purchase heavy duty landscape stakes at least 12" long with a diameter of ≤ 3/8". Drive the stakes through the brackets and into the soil.

Wall Assembly

STEP
01

Align the L22 threshold piece with the base frame as shown in the diagram. Make a mark through each of the three holes.

BOX	PART	NO	QTY
ALBOX-3		L22	1
ALBOX-4		J111	2
ALBOX-4		J129	3
ALBOX-4		Z13 Ø5X40	3

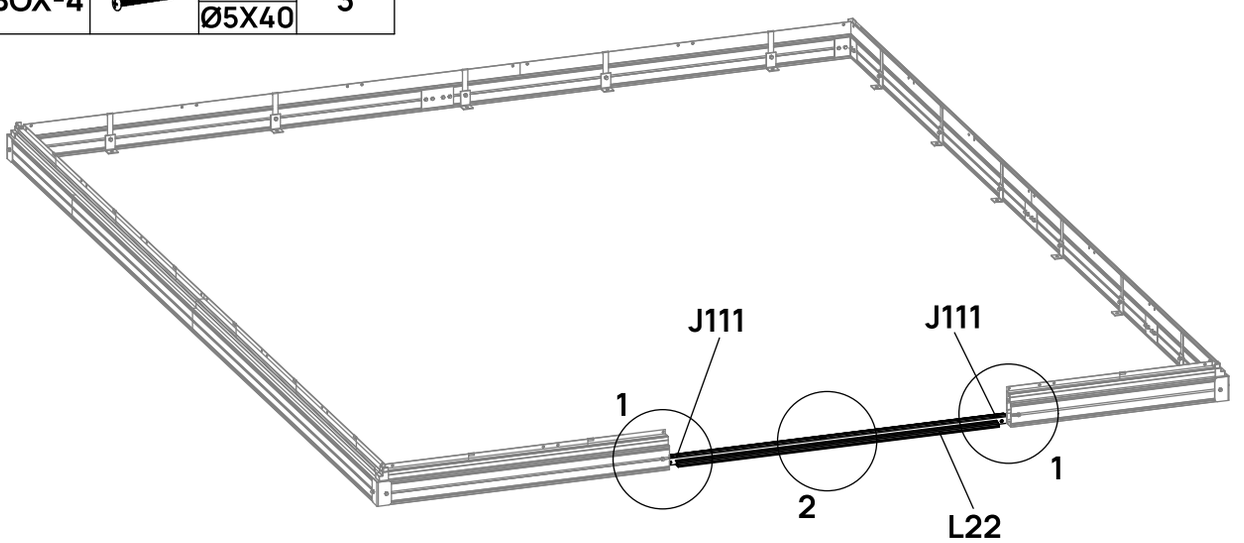

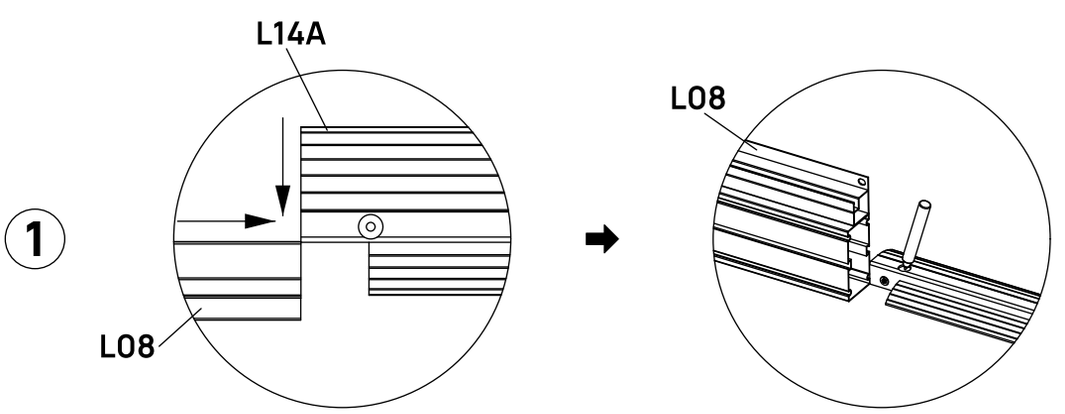

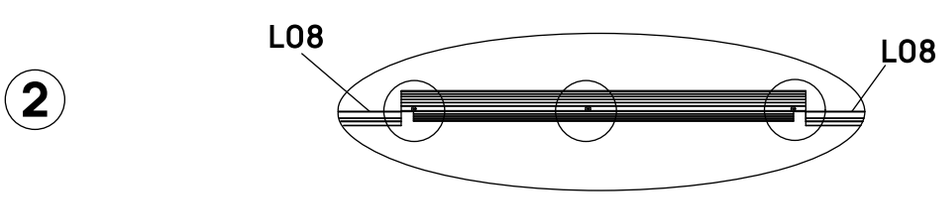

a. For wood surfaces, use Z13A screws to affix the threshold directly to the ground.

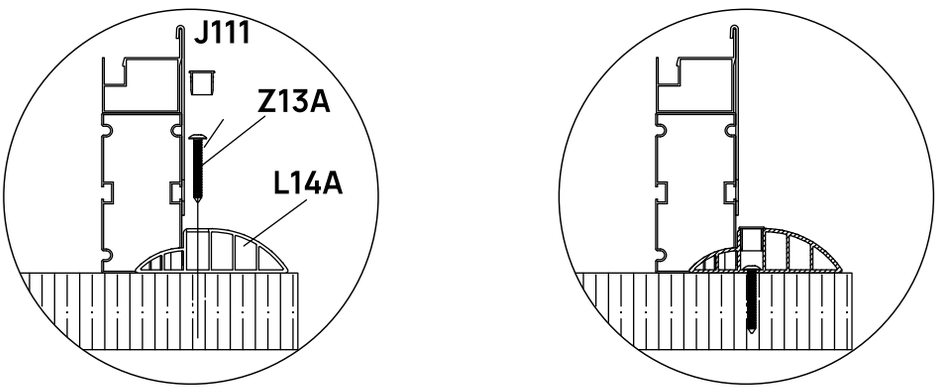

b. For cement surfaces, remove the threshold piece, drill pilot holes at 2.5" depth with a 5/16" drill bit, insert J129 expansion anchors into the holes, then use 13A screws to affix threshold back to the ground.

c. Finally use J111 caps to seal the holes.

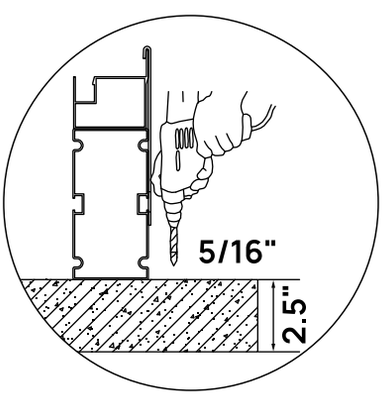

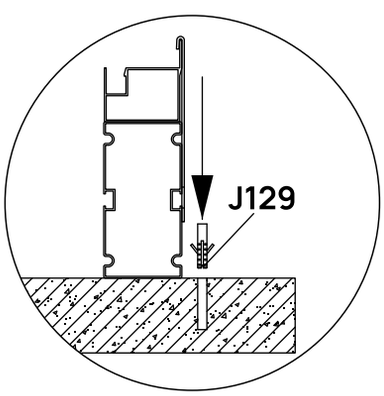

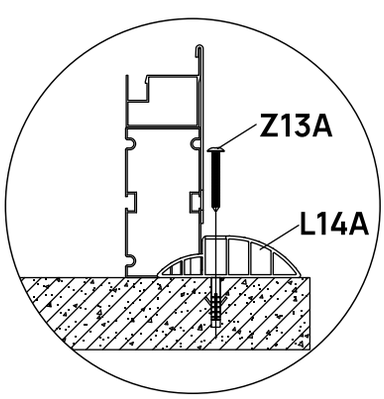

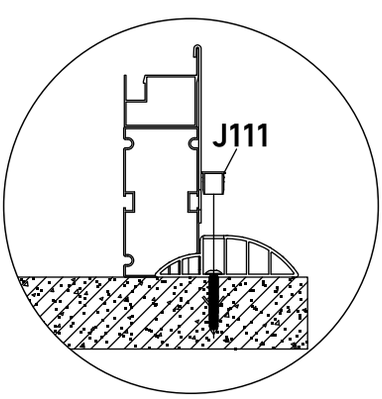

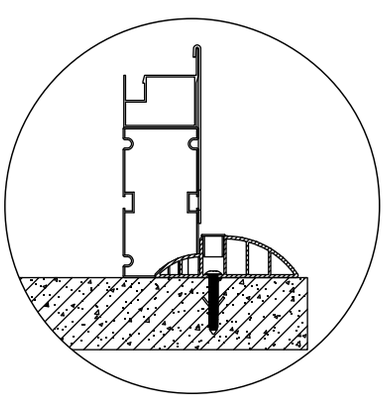

Note: The middle hole is not equipped with J111.

STEP

02

Assemble 2 sets of L03 door frame pieces as shown, using D470 connectors and Z17 screws. Use only one Z17 screw on the inner side of L03C and L03D as shown.

BOX	PART	NO	QTY
ALBOX-2		L03C	1
ALBOX-2		L03D	1
ALBOX-4		L03F	1
ALBOX-4		L03G	1
ALBOX-4		D470	2
ALBOX-4		D469	2
Pre-installed		S26A M5X12	2
ALBOX-4		S99 M5X45	2
ALBOX-4		Z17 M4.8X16	14
ALBOX-4		S03A M6X10	4
ALBOX-4		M24 M6	4

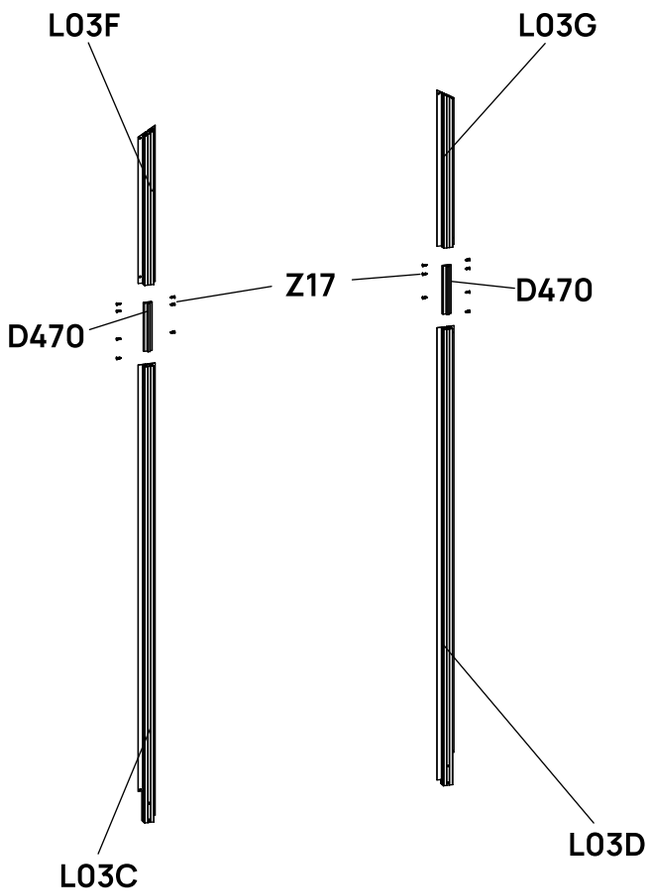

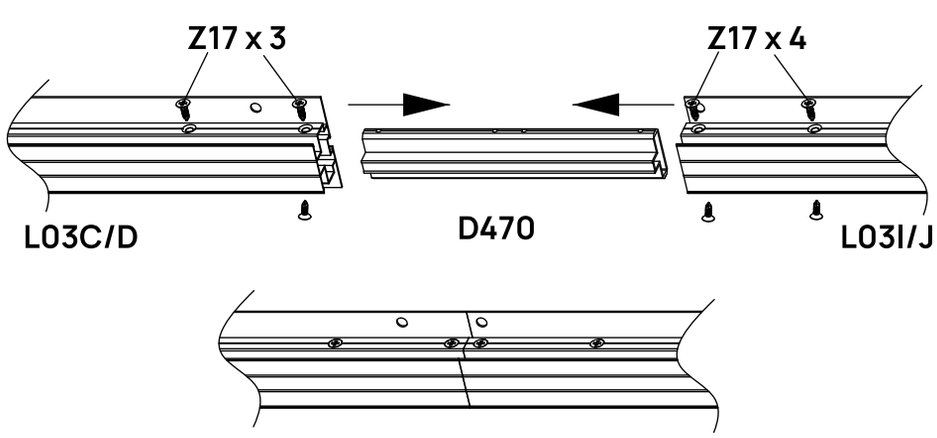

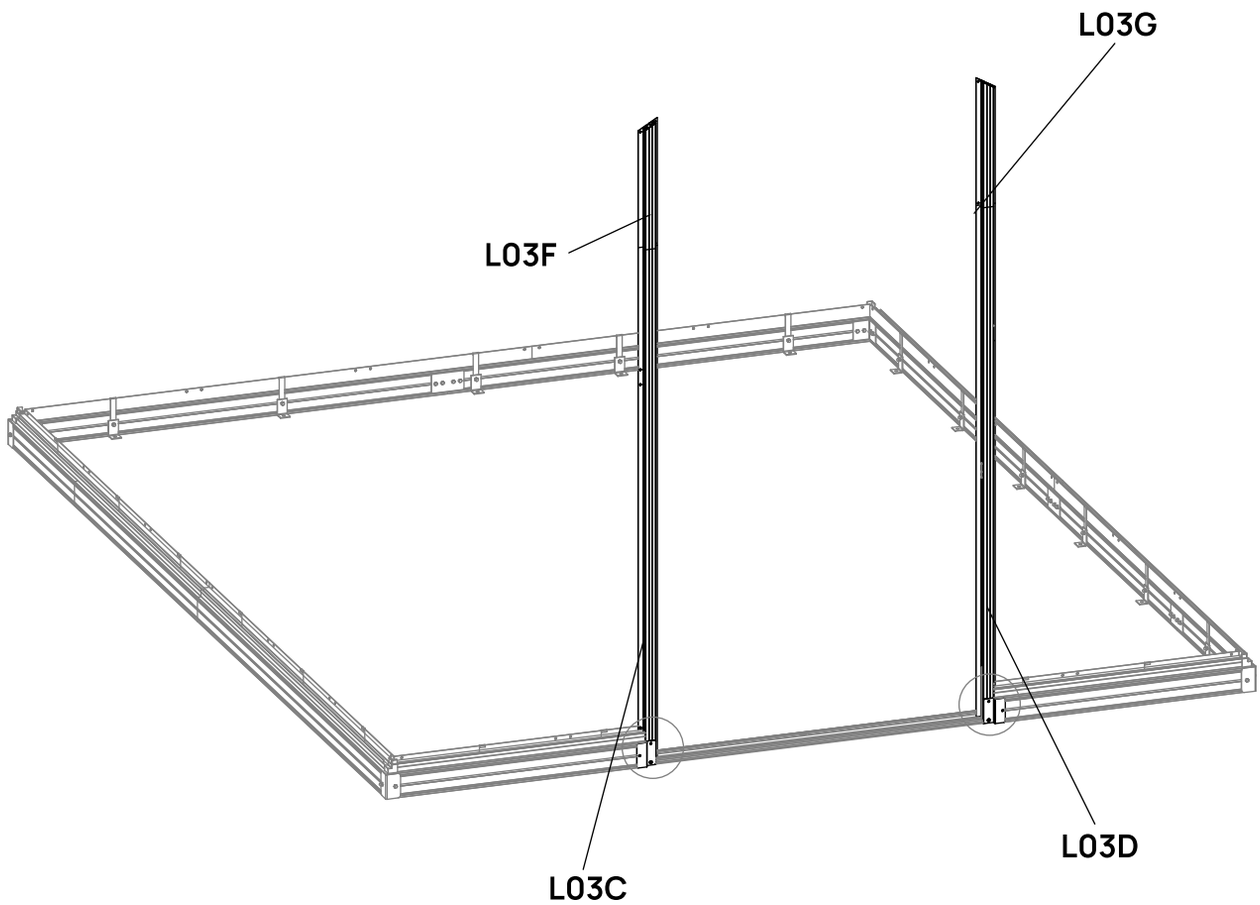

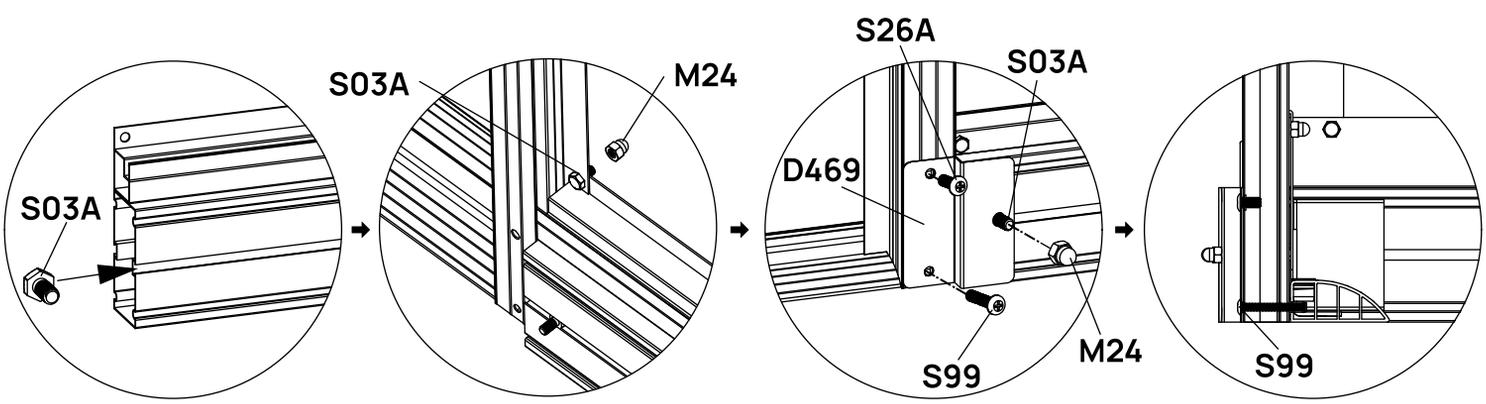

Slide one S03A in the groove of the foundation piece in the front as shown. Attach the L03 door frame to the base and foundation, secure it with the mounting plate D469, using specific bolts as shown.

Note: S26A is pre-installed.

STEP

03

Assemble L01A/B curve frames on both sides as shown. Loosely attach all bolts and nuts. Do not tighten until the entire wall frame is completely assembled.

BOX	PART	NO	QTY
ALBOX-1		L01A	1
ALBOX-1		L01B	1
ALBOX-4		L05C	2
ALBOX-4		S03A M6X10	12
ALBOX-4		M24 M6	12

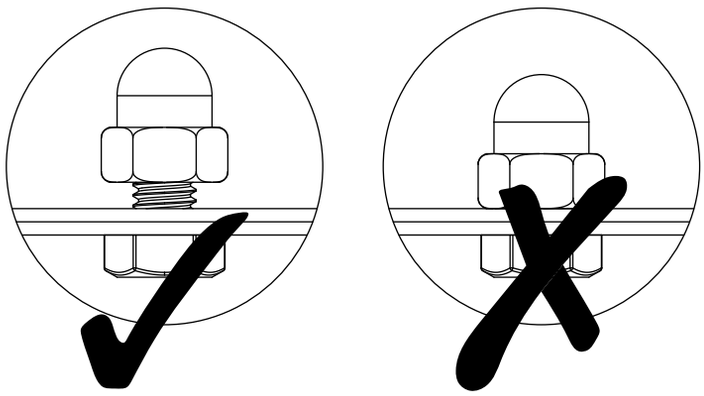

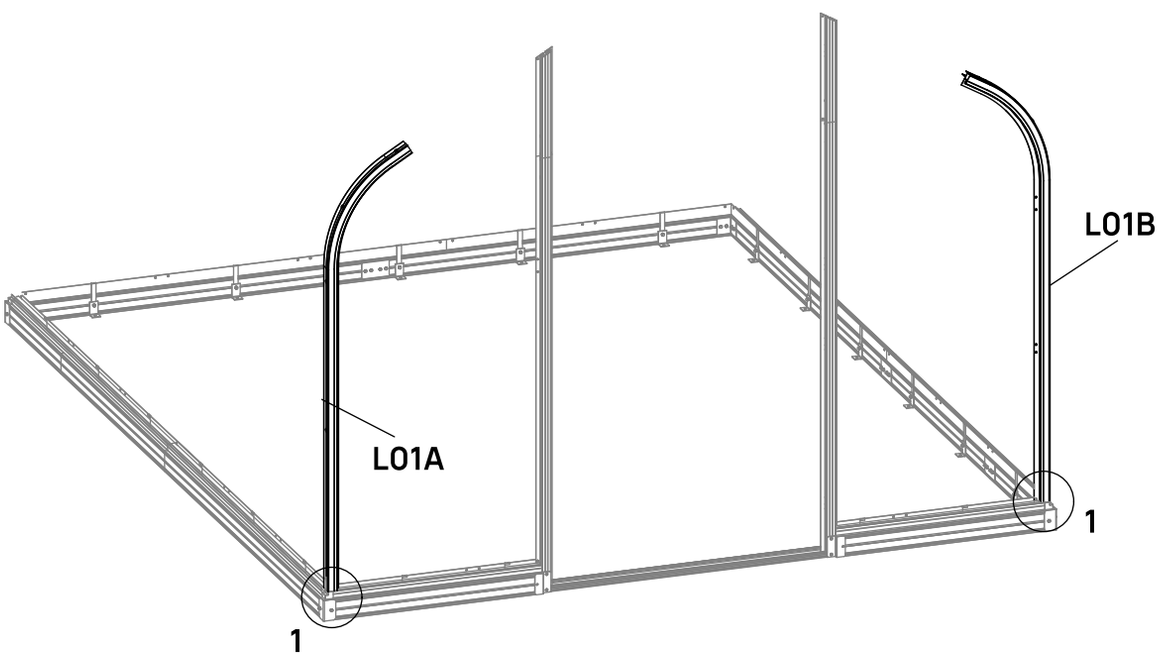

1

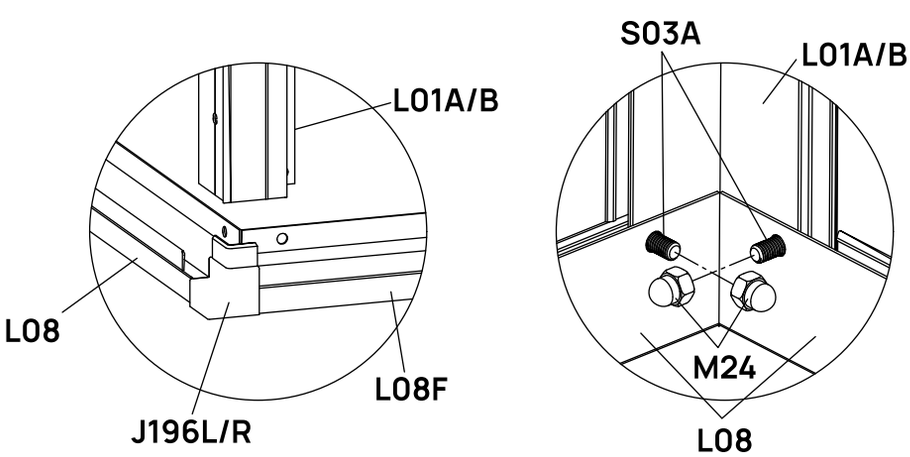

STEP

04

Assemble L05C inner connecting frames as shown.

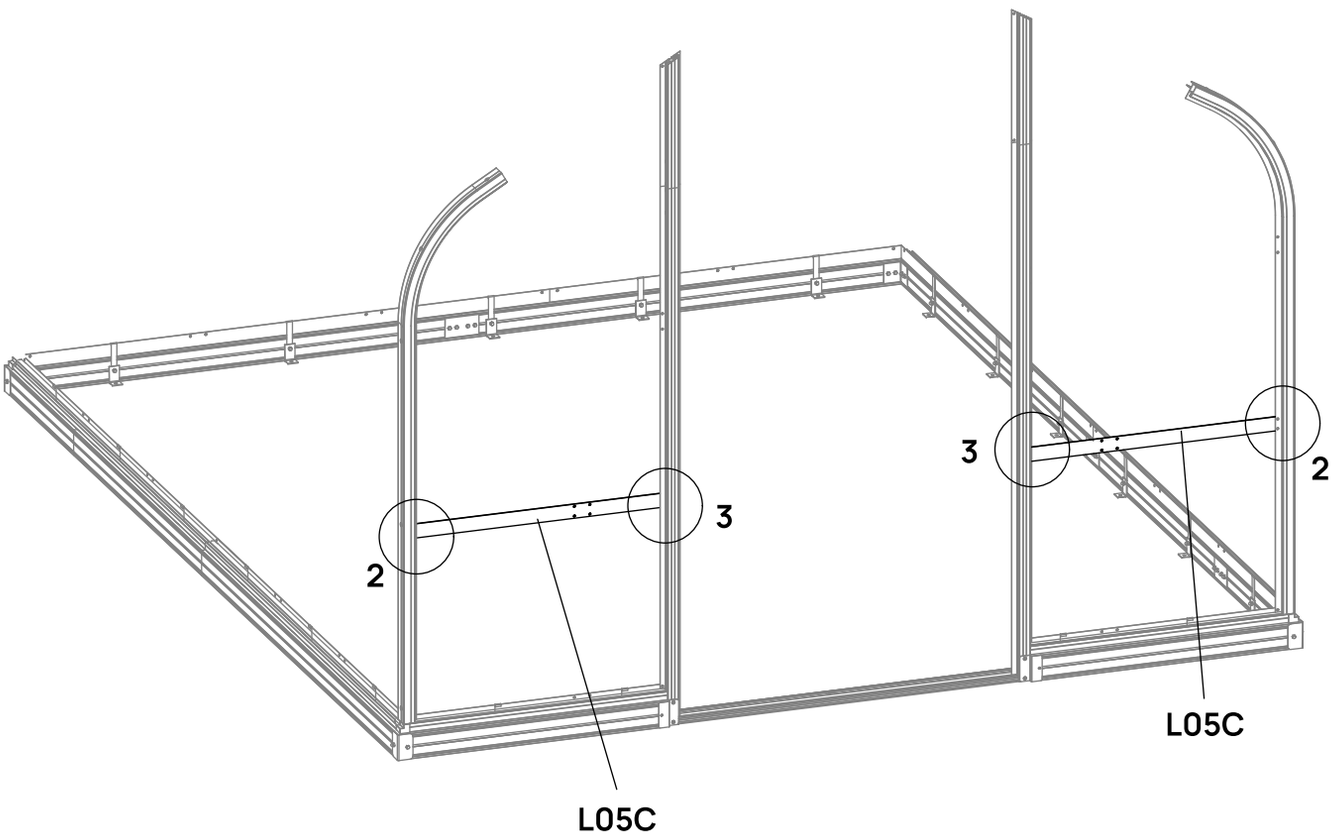

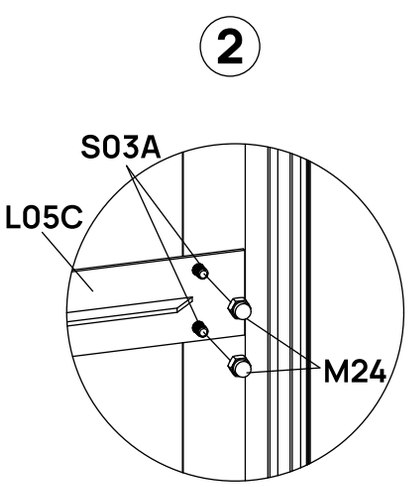

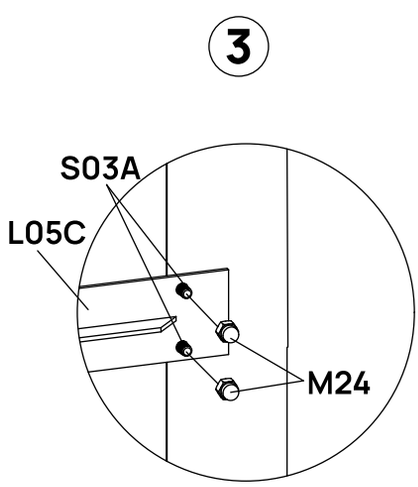

STEP

05

Assemble L04A frames on both sides as shown.

BOX	PART	NO	QTY
ALBOX-4		L04B	2
ALBOX-4		S03A M6X10	4
ALBOX-4		M24 M6	4
PCBOX-3		Y1	1
PCBOX-3		Y2	1
PCBOX-3		Y5	2
PCBOX-2		H158	1

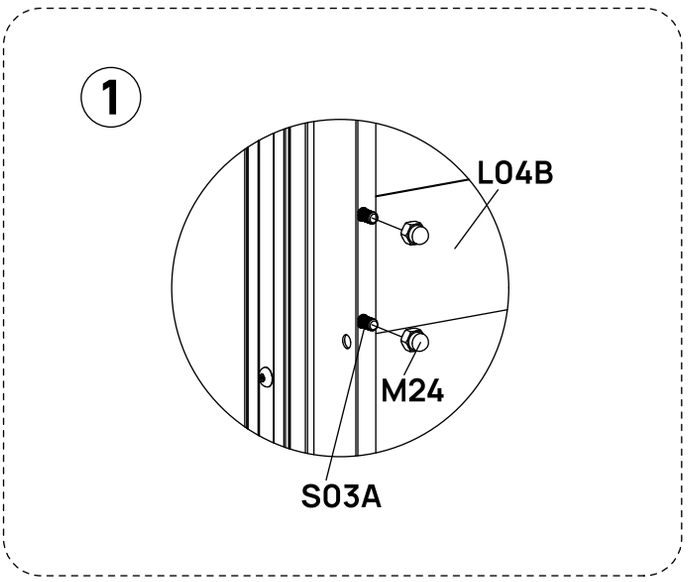

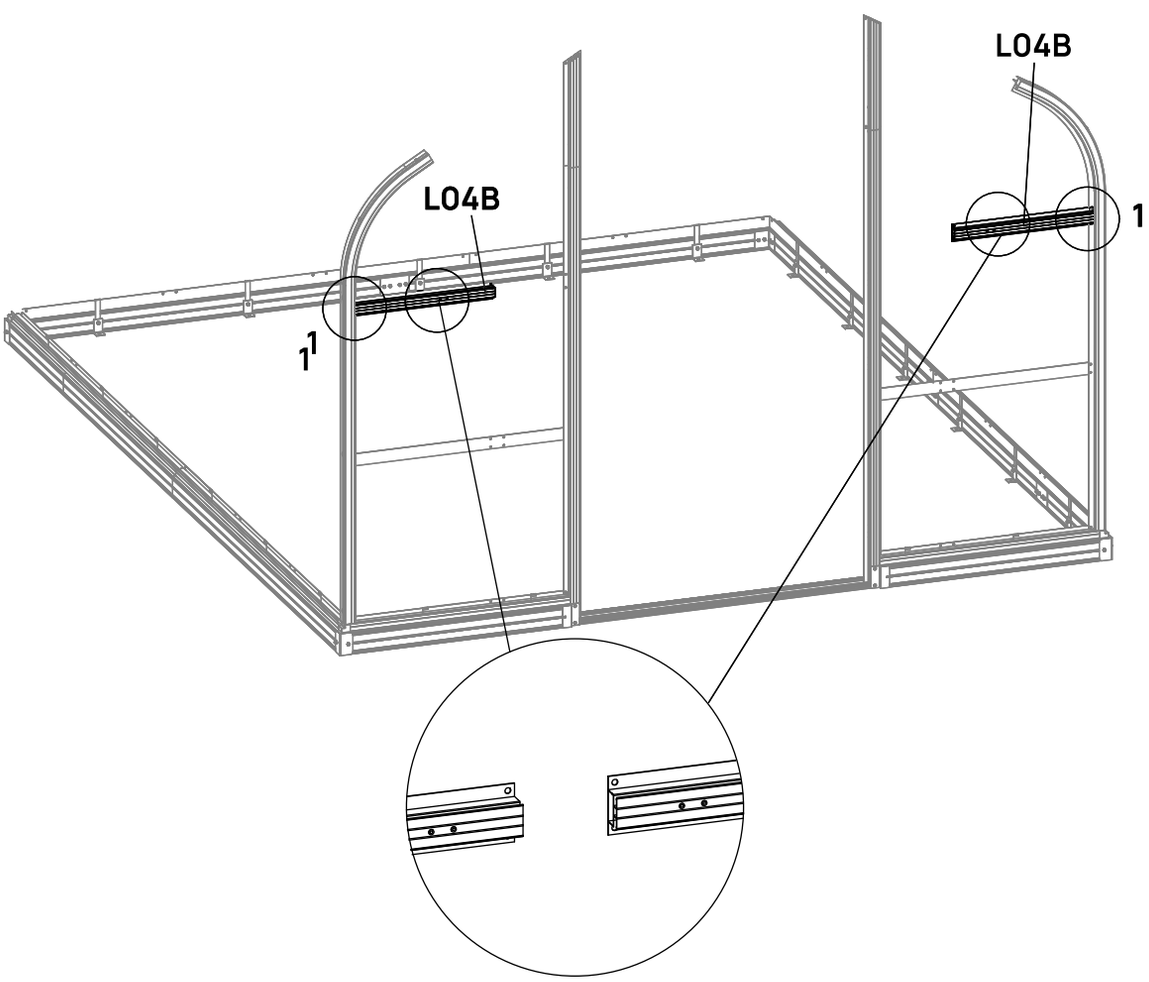

The ends of L04B with screws face to the door.

STEP
06

For PC Panels,

Remove the clear film prior to assembly. The white film indicates the UV-Protected side of the panels. Peel back the white film to expose only the edges (until the panels are in place) to ensure that the UV-Protected side is facing outwards in final assembly.

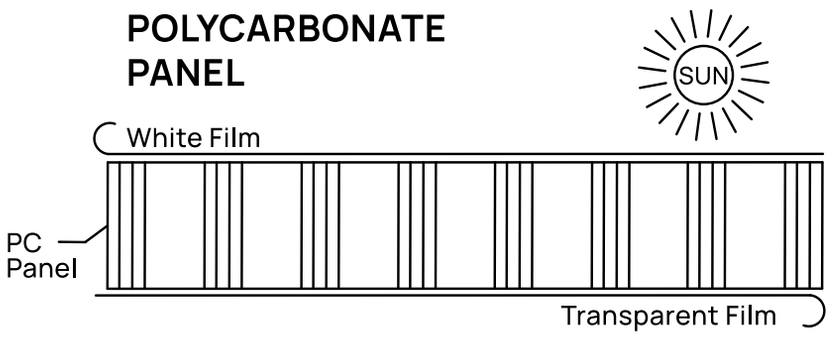

Cover the two cut edges of the PC panels with the provided H158/159 tape before installation to seal the channels & prevent moisture from getting trapped inside.

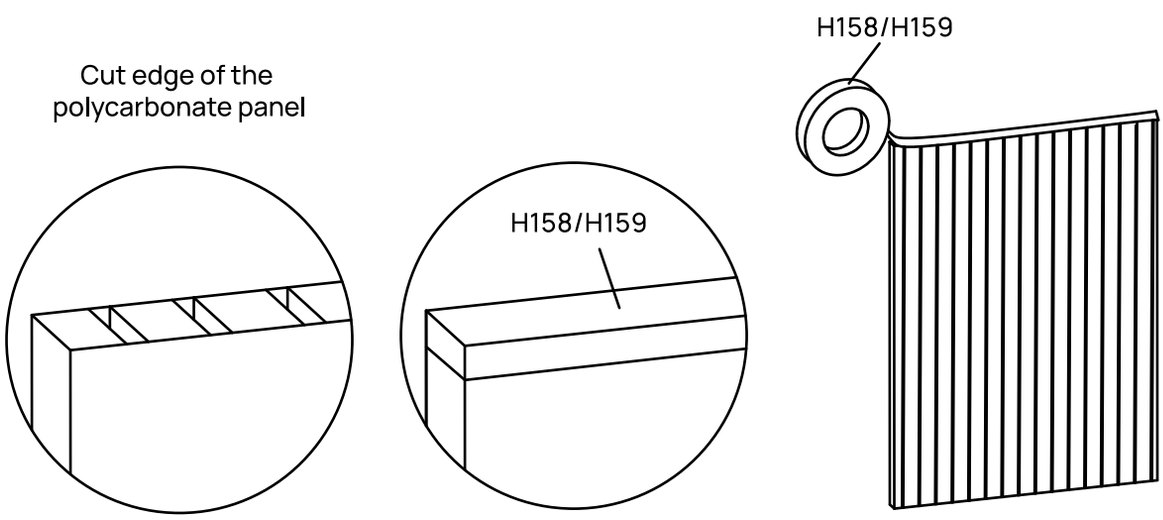

Insert Y1/2 and Y5 PC panels into place as shown.

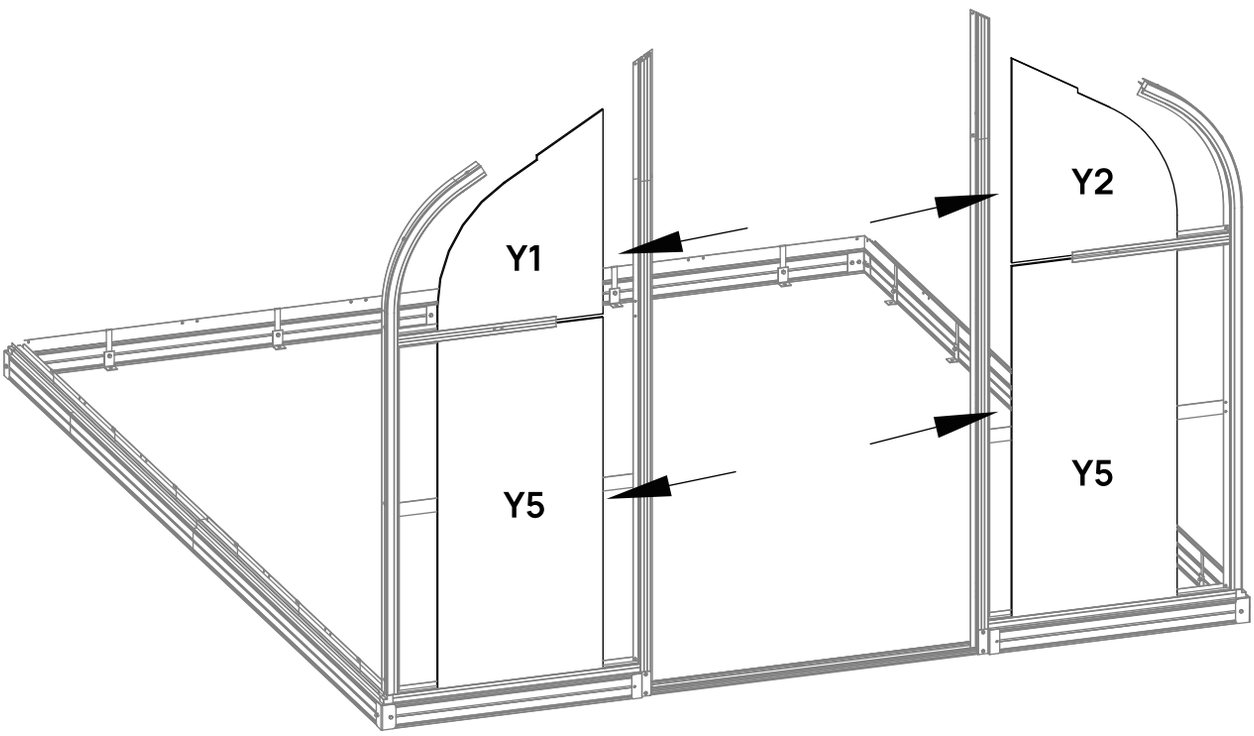

vegogarden.com

STEP

07

Assemble L03A and L03B frames as shown.

BOX	PART	NO	QTY
ALBOX-2		L03A	1
ALBOX-2		L03B	1
ALBOX-4		S03A M6X10	16
ALBOX-4		M24 M6	16

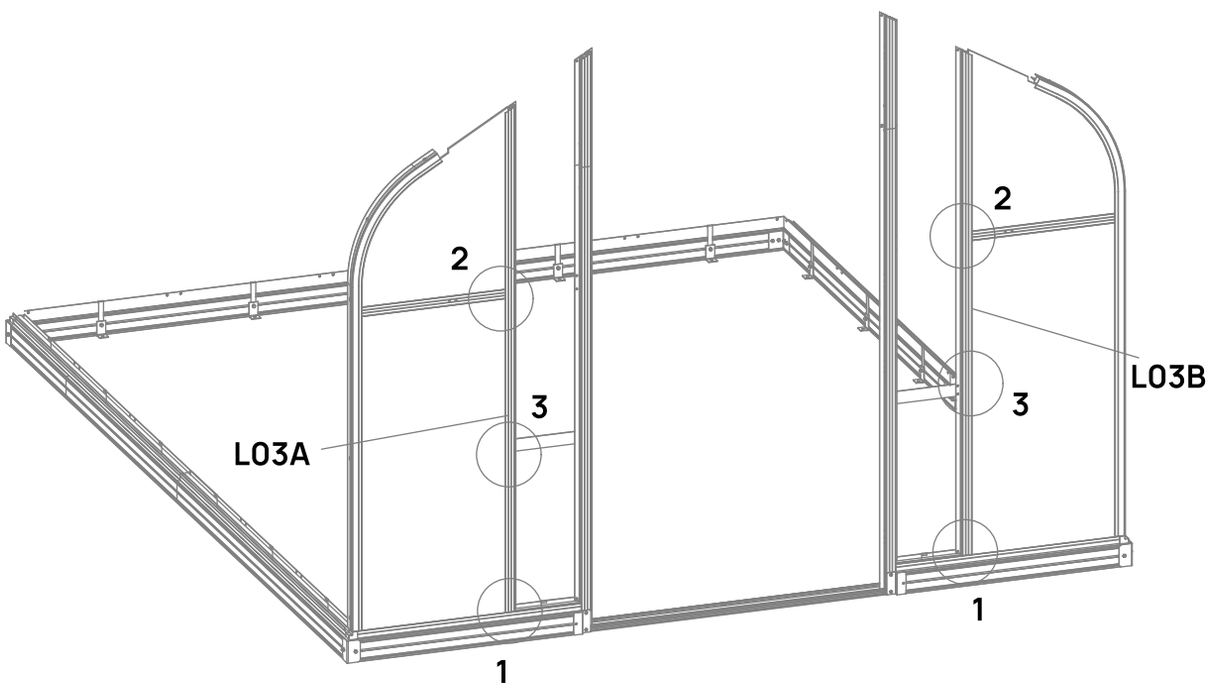

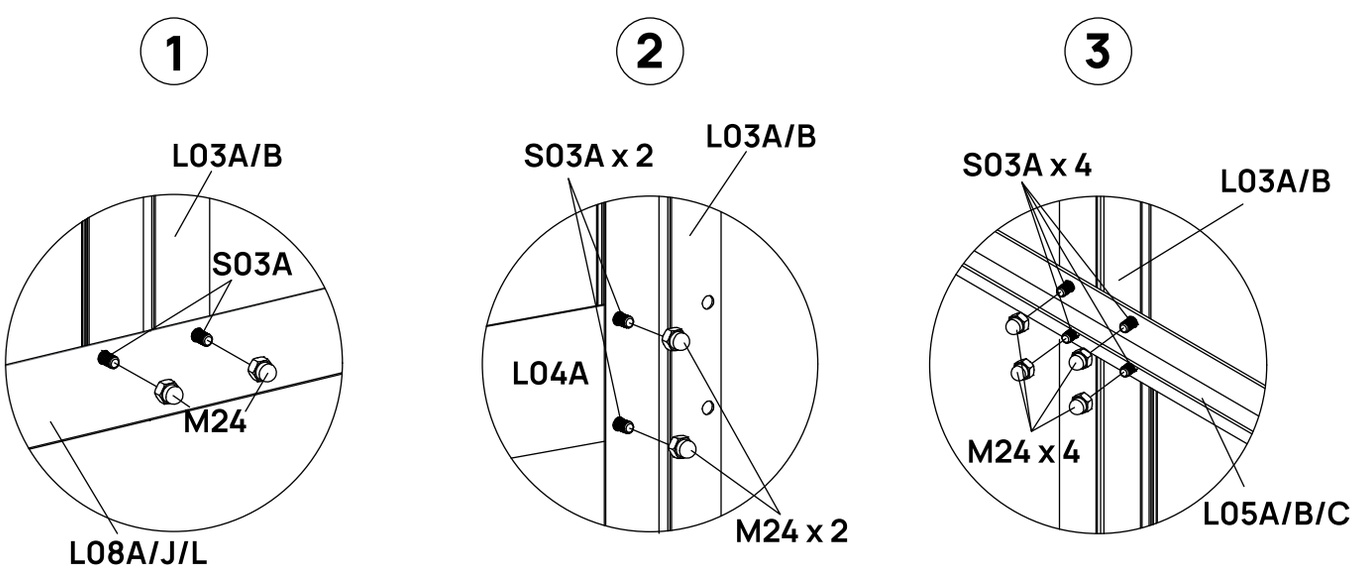

Note: For easier installation, use the provided hex tool.
Position the head of S03A bolt in the tool, then use it to insert the bolt into the frames and secure with M24 nut.
Repeat this process for all hard-to-access locations.

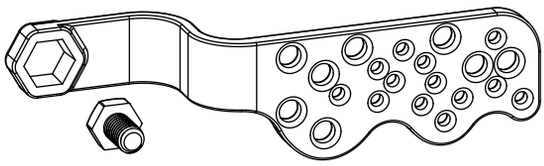

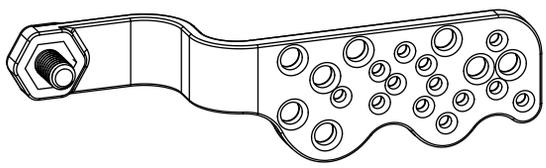

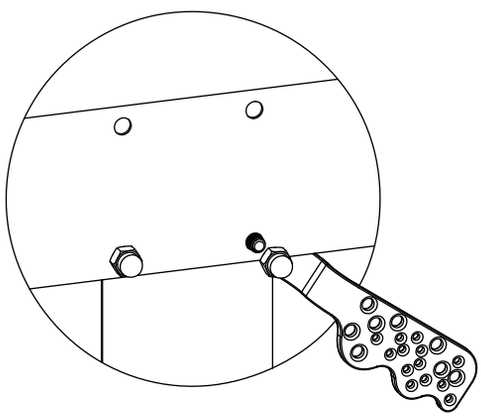

As the front panel section has been partially assembled, have it temporarily supported to prevent tipping at this stage.

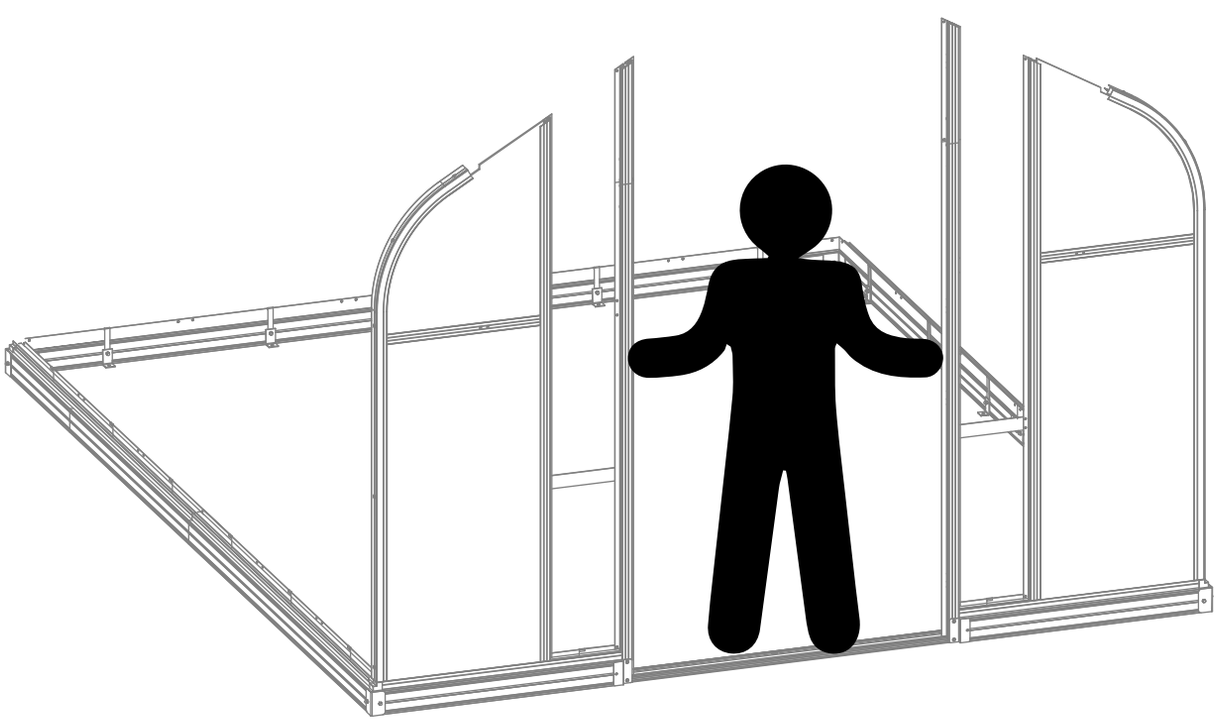

STEP

08

Assemble L02B frames as shown, then install the L05B inner connecting frames.

BOX	PART	NO	QTY
ALBOX-1		L02B	2
ALBOX-2		L05B	2
ALBOX-4		S03A M6X10	12
ALBOX-4		M24 M6	12

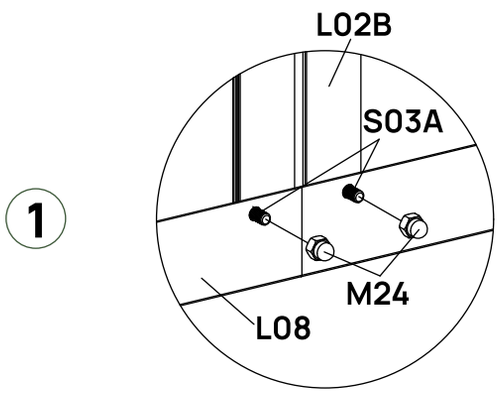

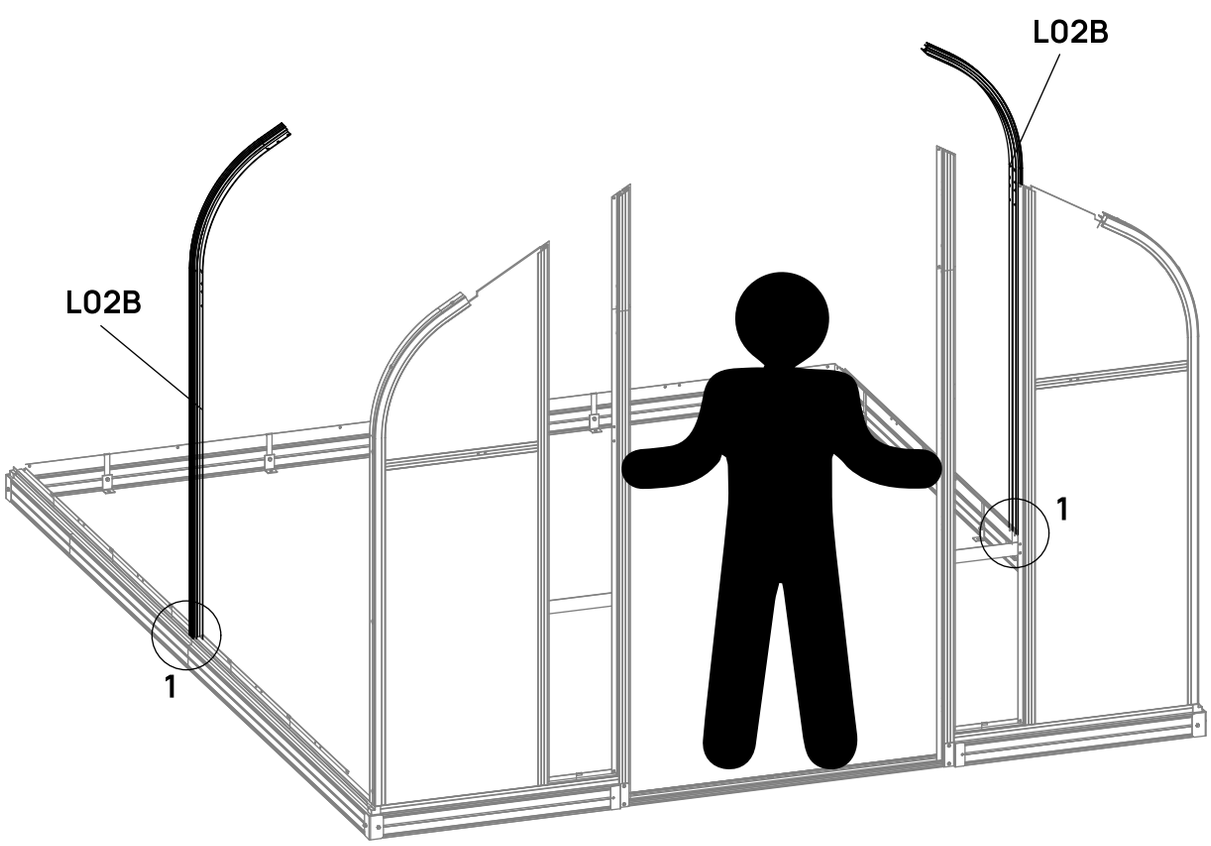

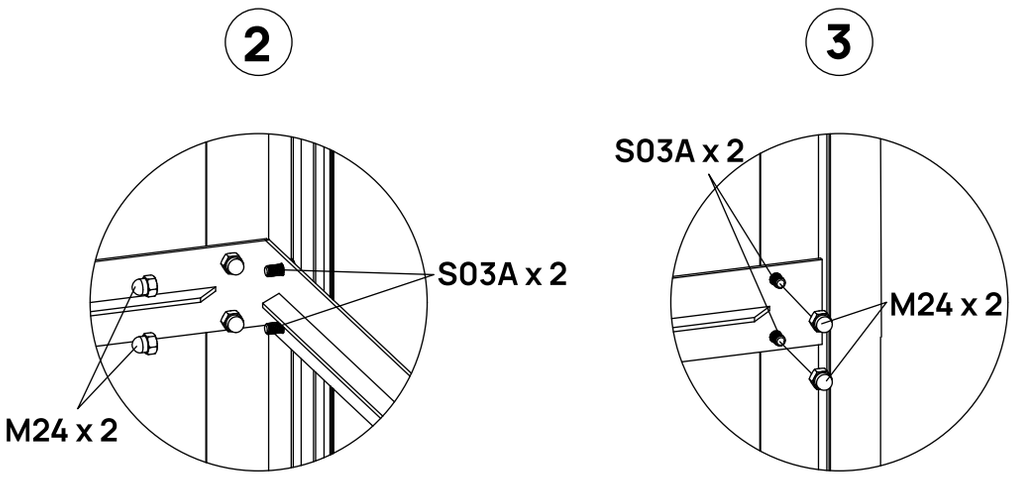
2
S03A x 2
M24 x 2
3
S03A x 2
M24 x 2

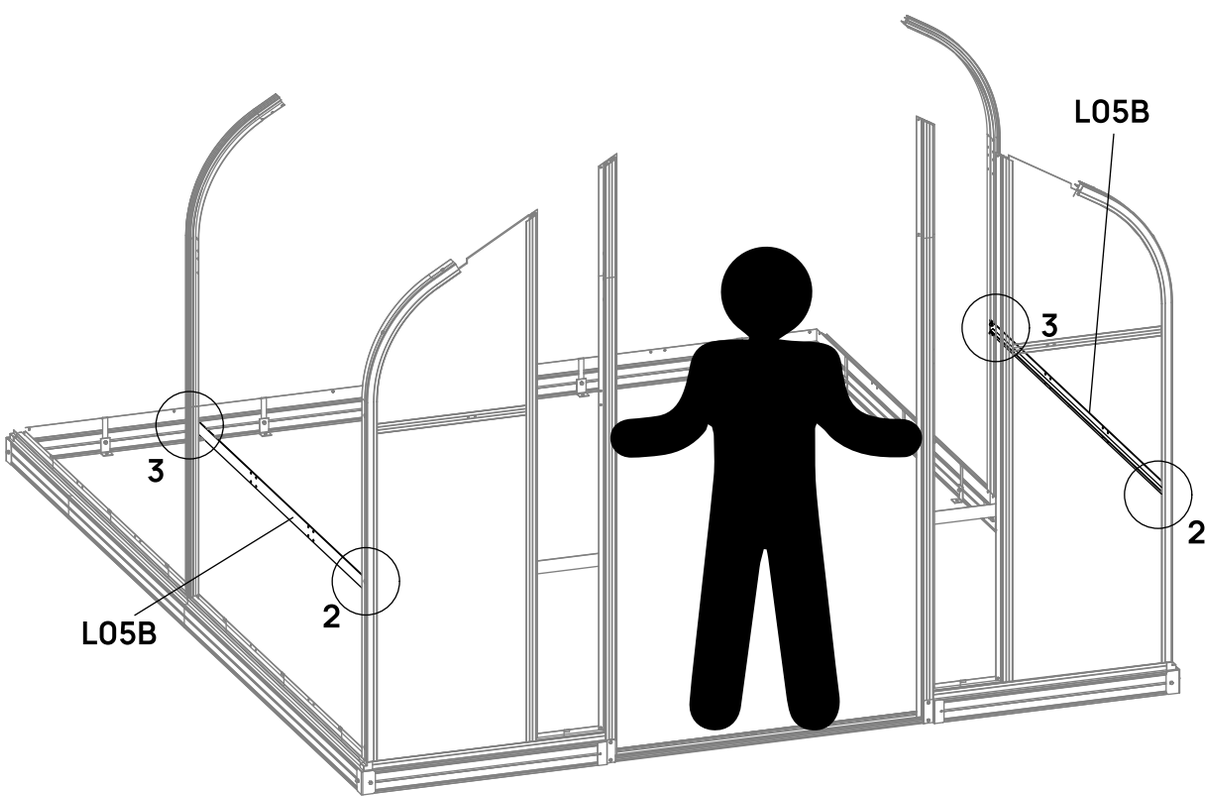
L05B
3
2
3
2
L05B

STEP

09

Assemble L01A and L01B frame as shown, then install the L05B inner connecting frames.

BOX	PART	NO	QTY
ALBOX-1		L01A	1
ALBOX-1		L01B	1
ALBOX-3		L03E	2
ALBOX-3		L05A	1
ALBOX-3		L05B	3
ALBOX-4		S03A M6X10	28
ALBOX-4		M24 M6	28

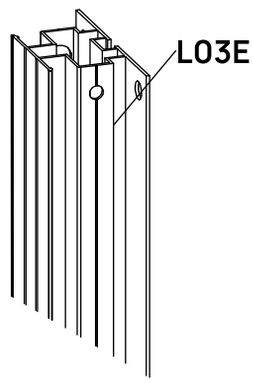

The end of L03E with holes face upward.

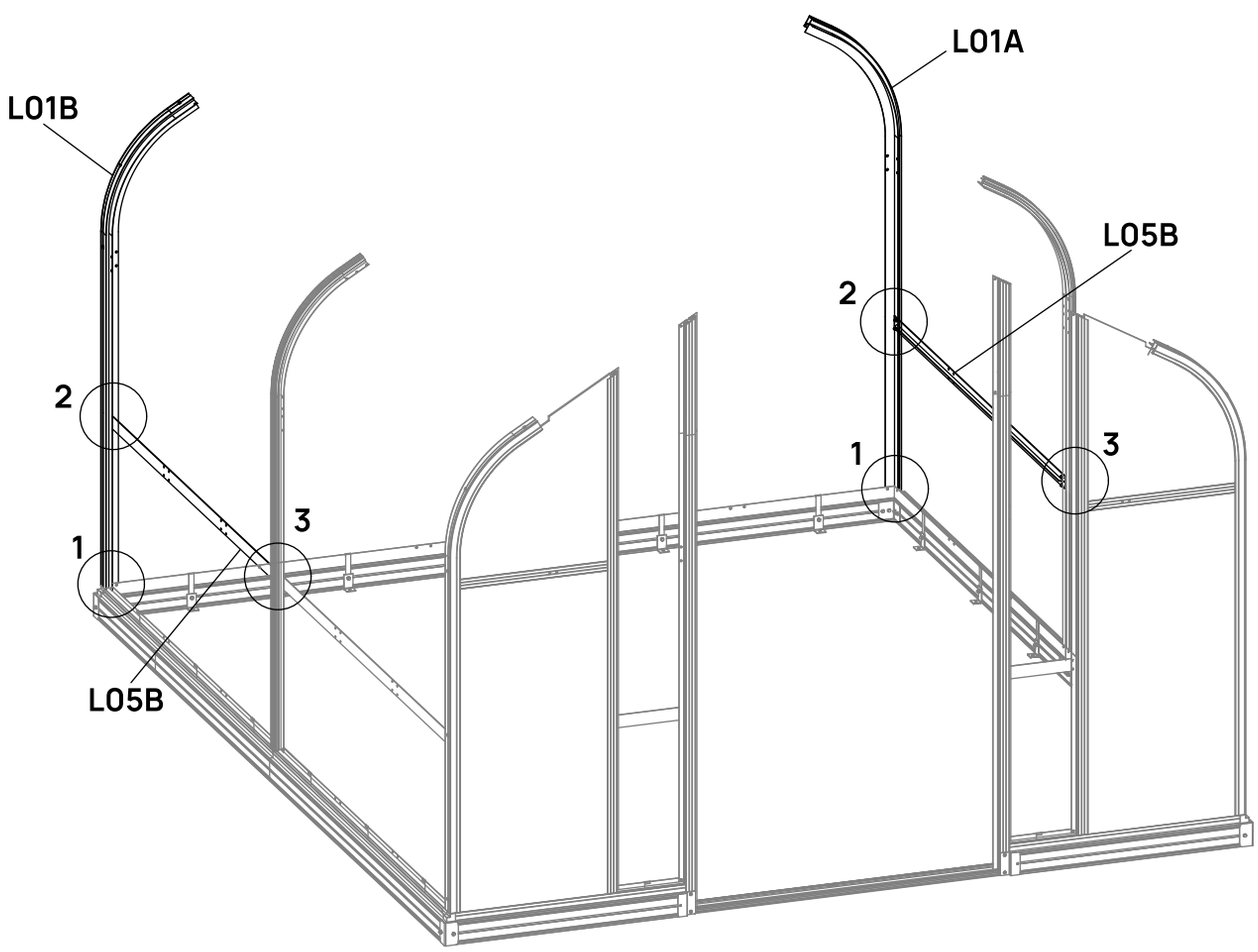

1

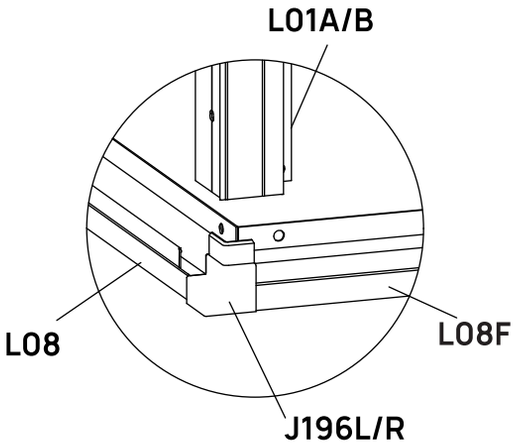
L01A/B
L08
L08F
J196L/R

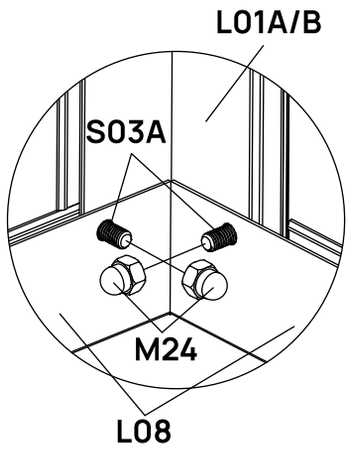
L01A/B
S03A
M24
L08

2

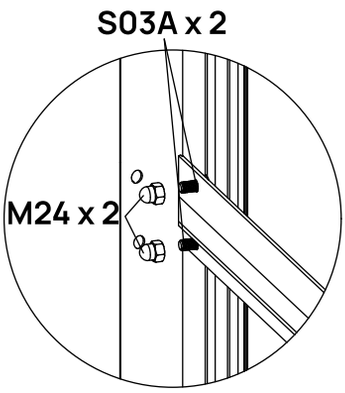
S03A x 2
M24 x 2

3

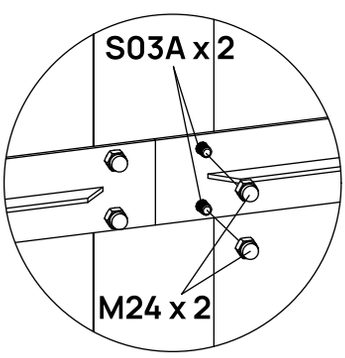
S03A x 2
M24 x 2

STEP

10

Install the previously assembled L03E frames as shown, then install the L05A/B inner connecting frames.

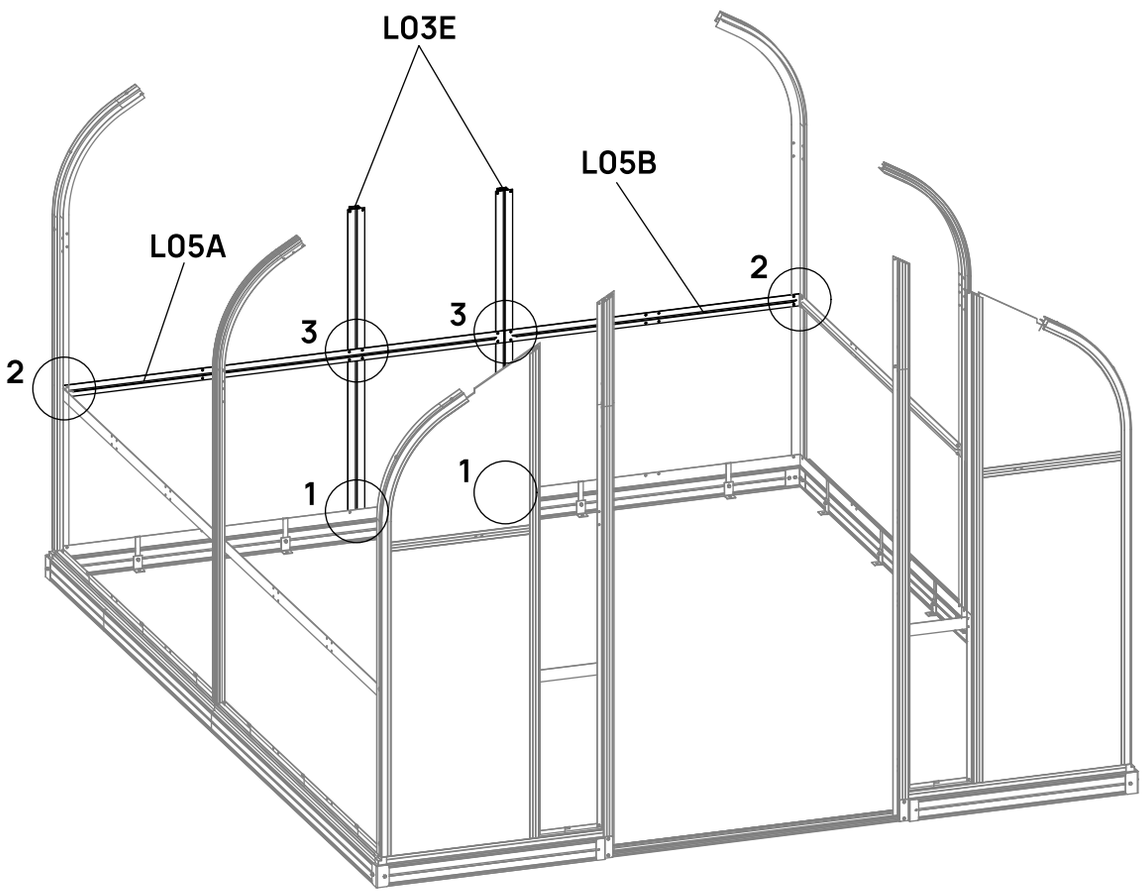

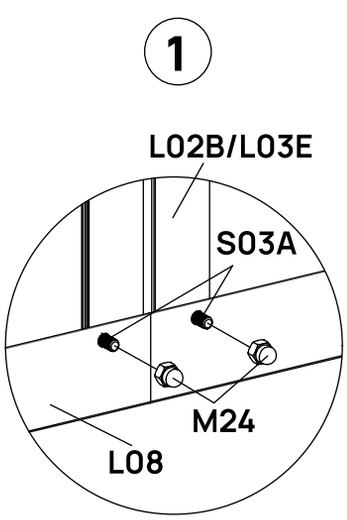

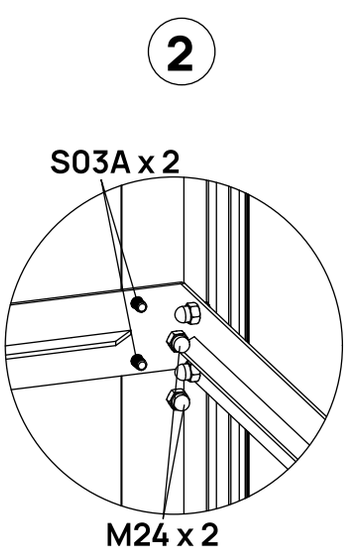

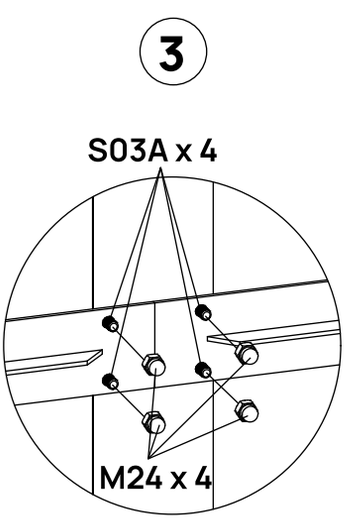

STEP

11

Assemble L04A frames as shown.

BOX	PART	NO	QTY
ALBOX-4		L04A	2
ALBOX-4		S03A M6X10	4
ALBOX-4		M24 M6	4

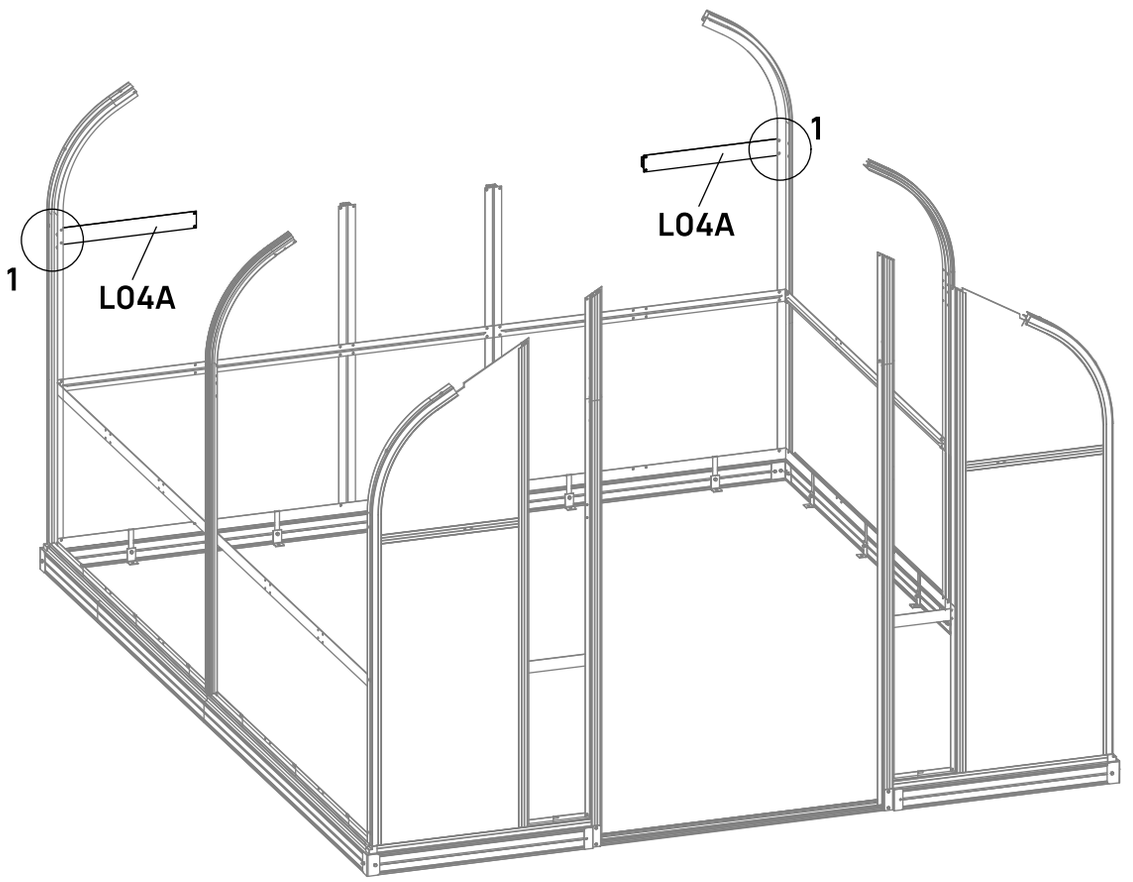

1

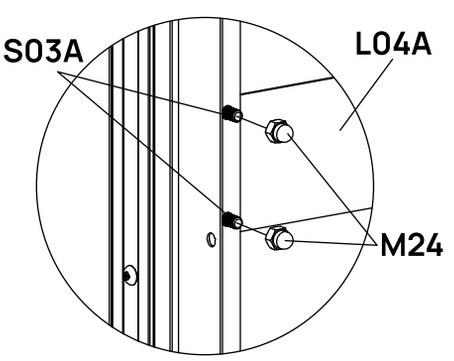

STEP

12

Insert Y1, Y2 and Y5 PC panels into place, then install L03A and L03B frames as shown.

BOX	PART	NO	QTY
PCBOX-3		Y1	1
PCBOX-3		Y2	1
PCBOX-3		Y5	2
PCBOX-2		H158	1
ALBOX-2		L03A	1
ALBOX-2		L03B	1
ALBOX-4		S03A M6X10	16
ALBOX-4		M24 M6	16

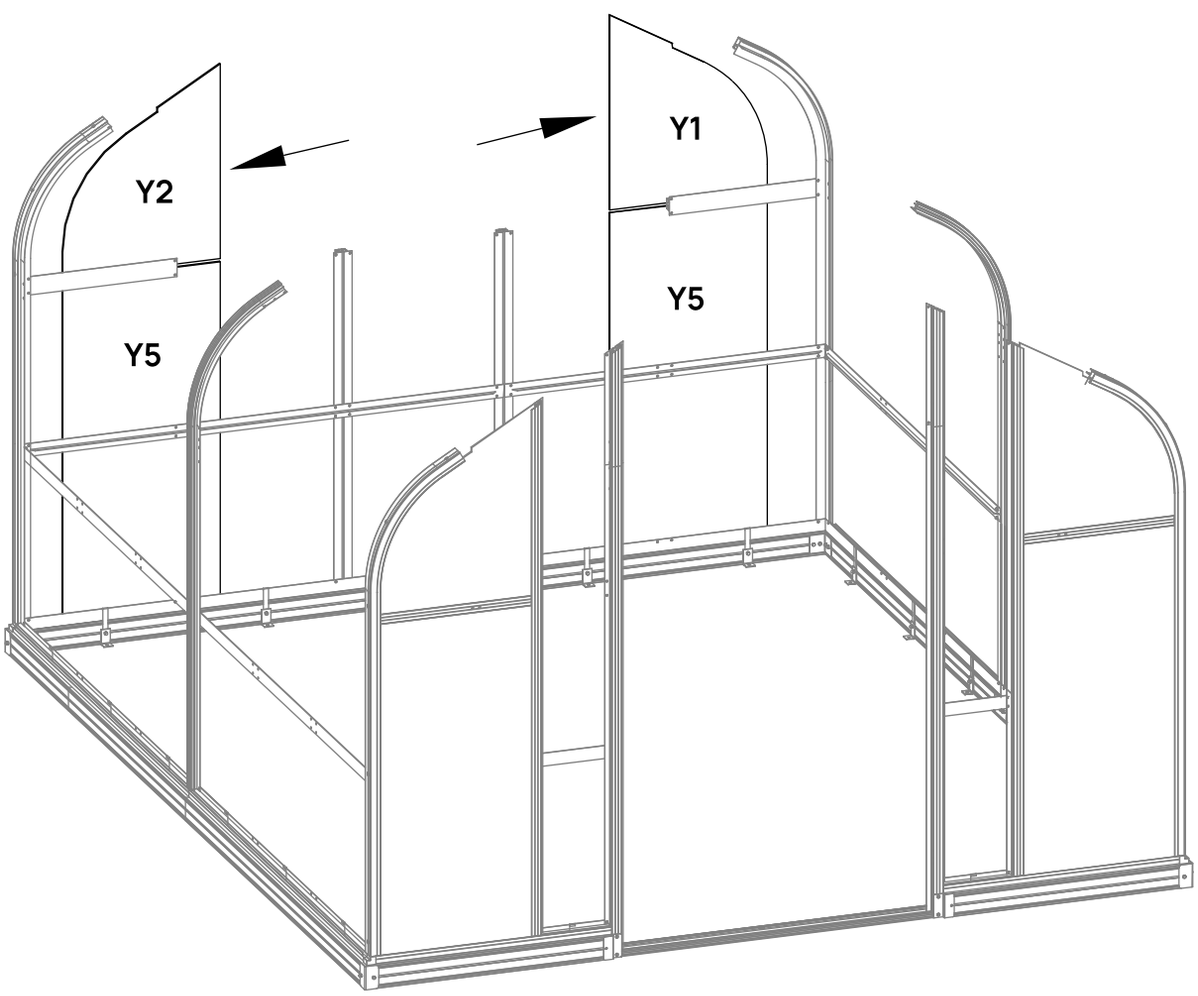

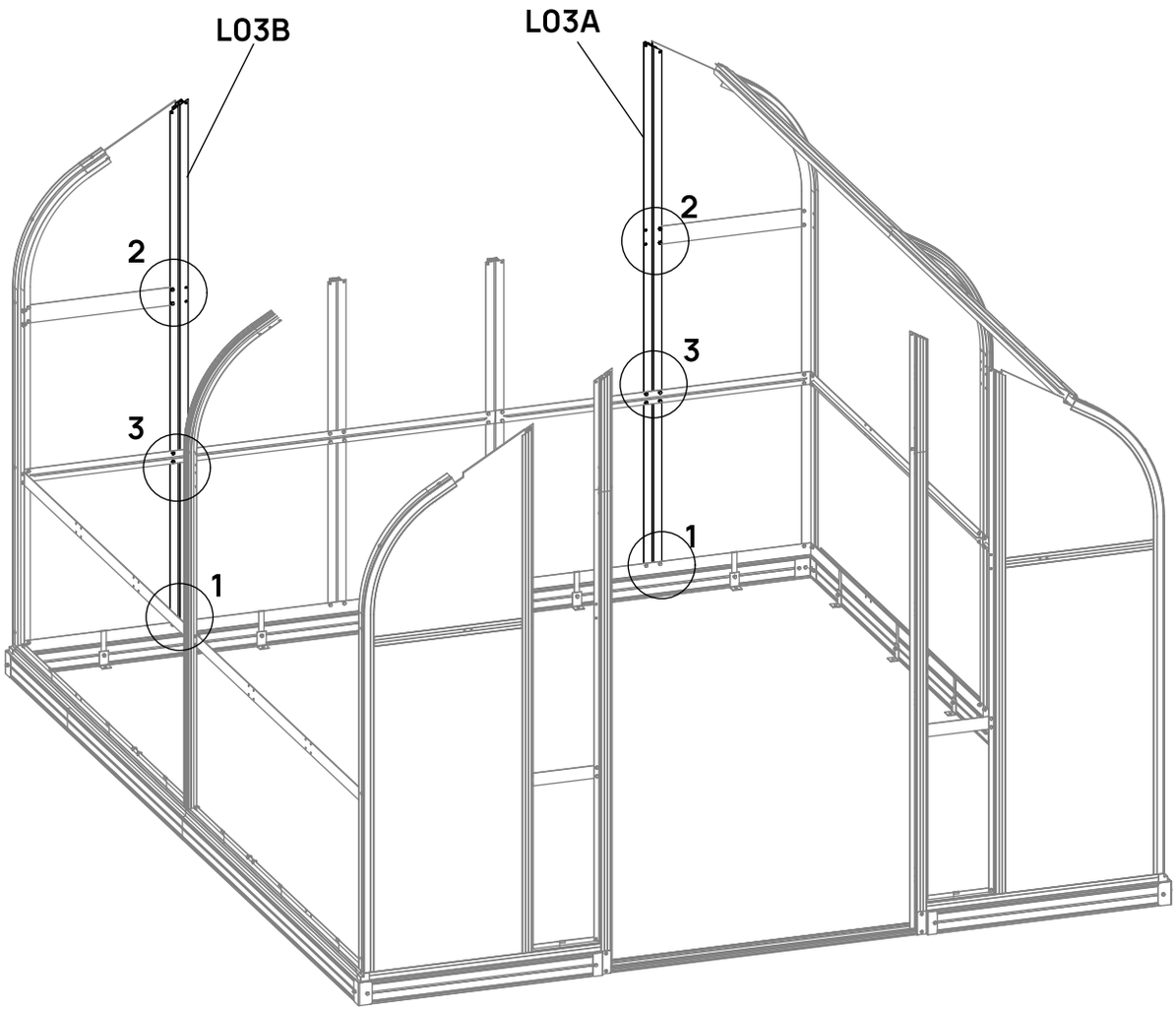
L03B
L03A
2
3
1
2
3
1

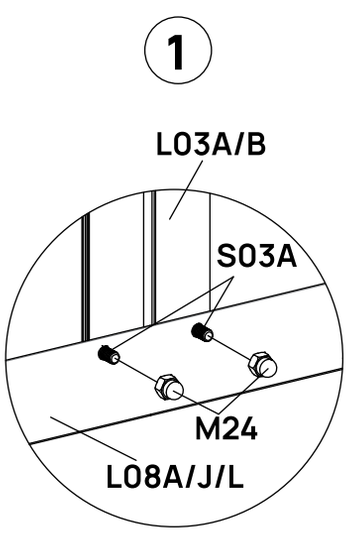
1
L03A/B
S03A
M24
L08A/J/L

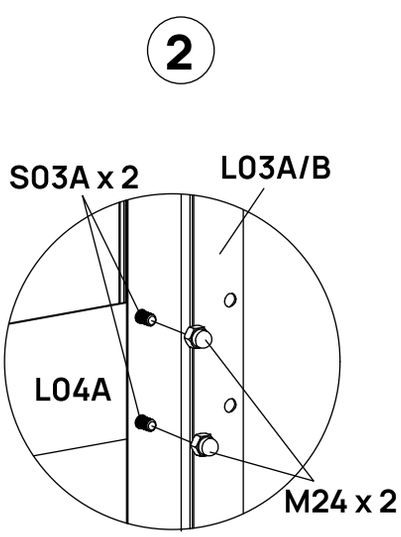
2
S03A x 2
L03A/B
L04A
M24 x 2

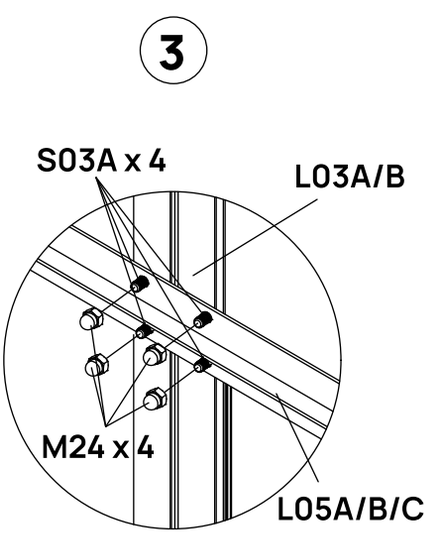
3
S03A x 4
L03A/B
M24 x 4
L05A/B/C

STEP

13

Assemble the horizontal eave pieces with A139 connectors and S26A bolts as shown.

BOX	PART	NO	QTY
ALBOX-2		L07C	2
ALBOX-2		L07D	2
ALBOX-4		A139	2
ALBOX-4		S03A M6X10	8
ALBOX-4		M24 M6	8
Pre-installed		S26A M5X12	8

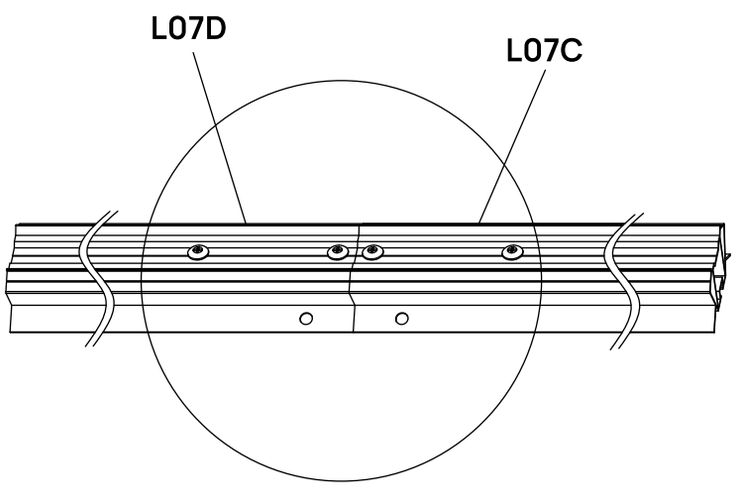

X2

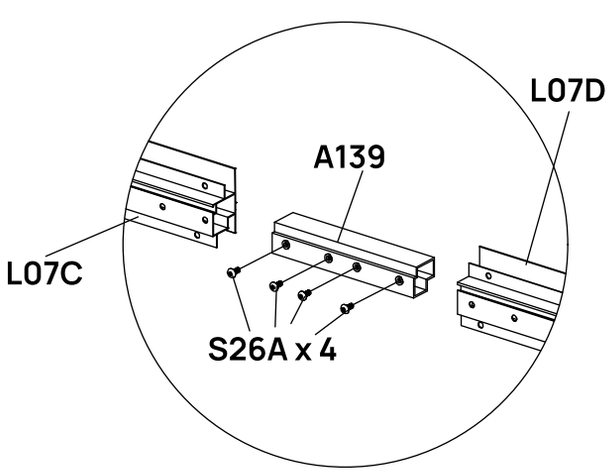

STEP

14

Hold the horizontal eave frames carefully and attach them to the front and back curve frames as shown.

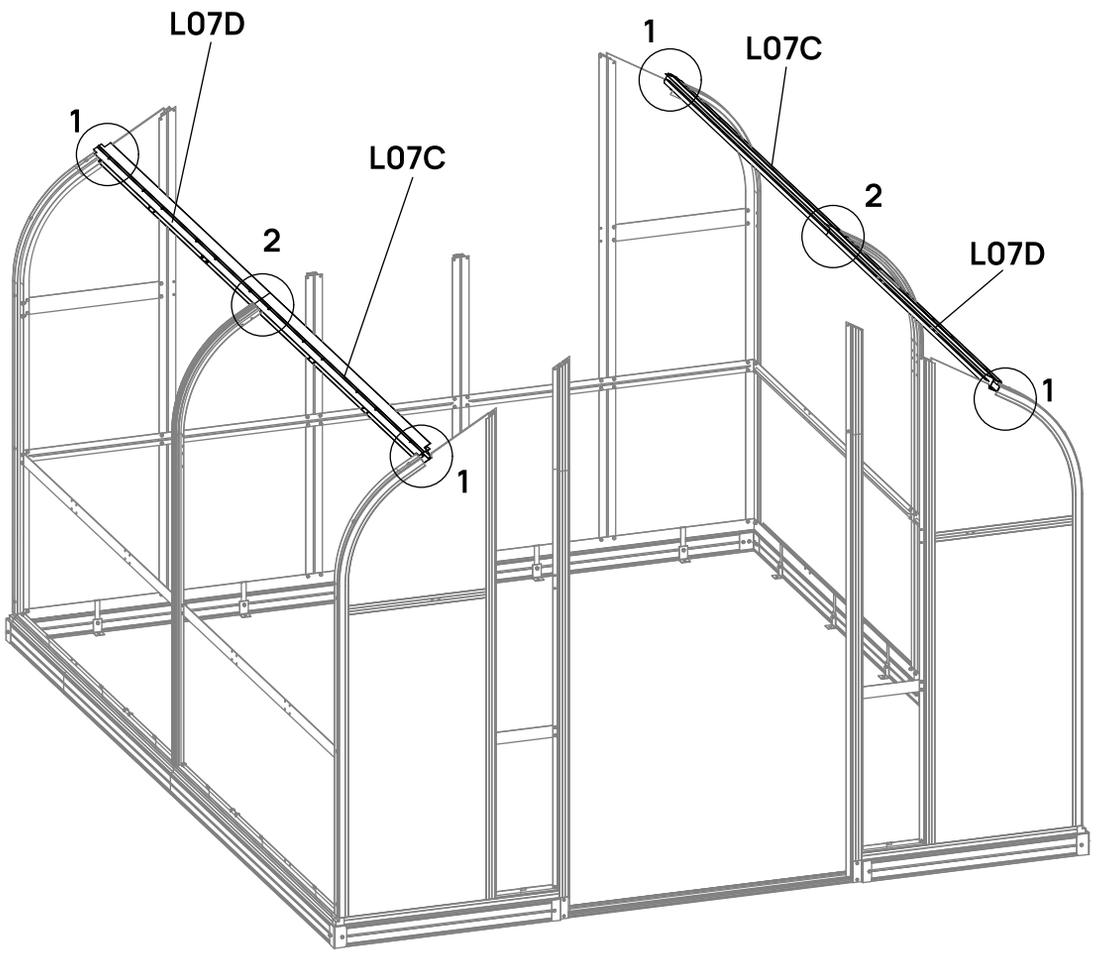

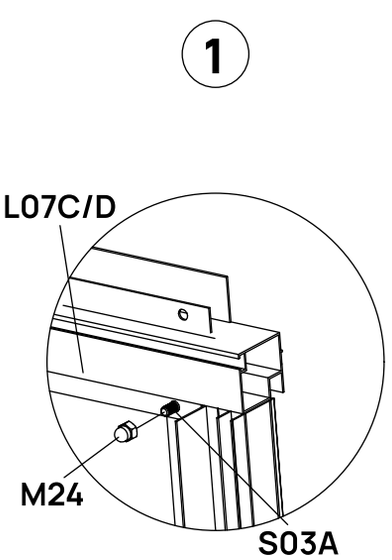

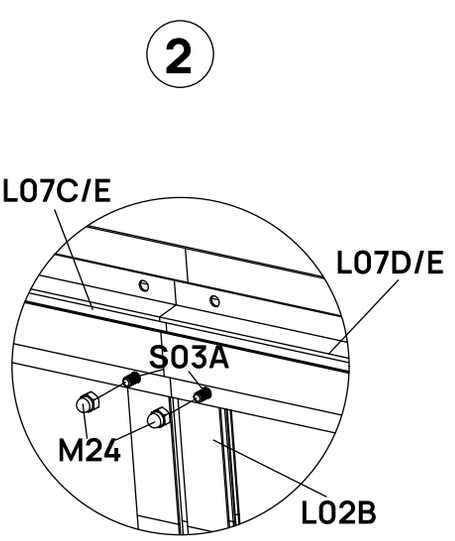

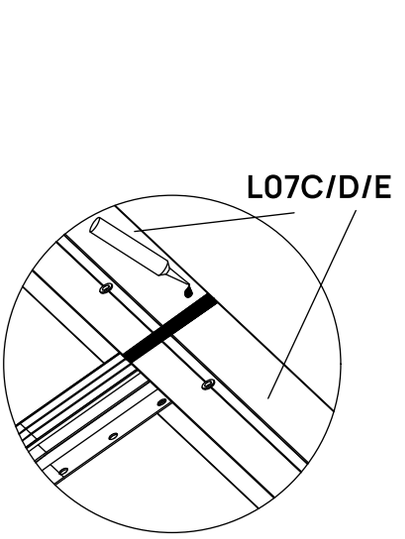

STEP

15

Insert Y5 and Y17 panels into place as shown.

BOX	PART	NO	QTY
ALBOX-4		L04E	2
PCBOX-3		Y5	3
PCBOX-3		Y17	2
ALBOX-4		S03A M6X10	8
ALBOX-4		M24 M6	8
PCBOX-2		H158	1

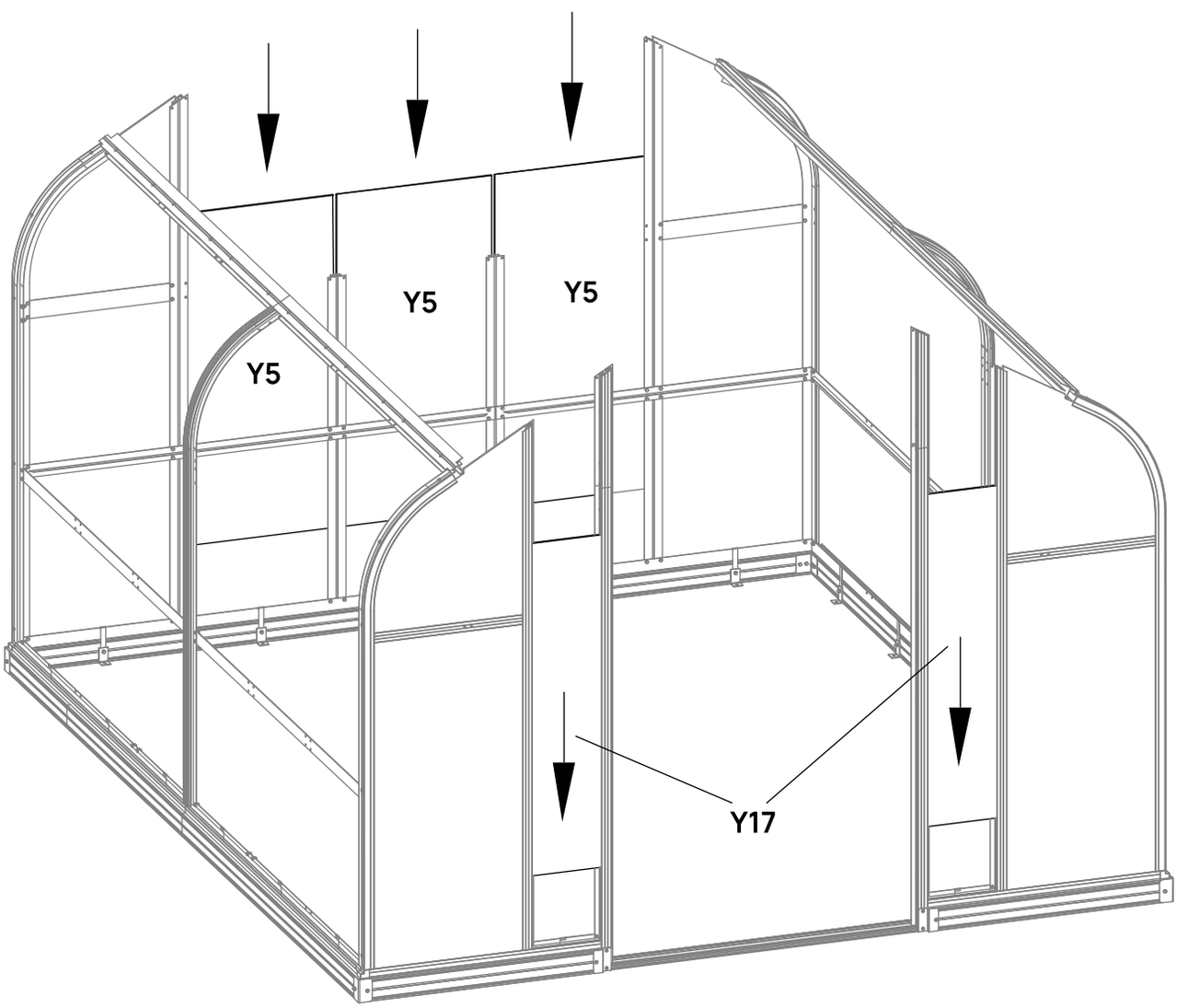

STEP

16

Attach L04E frames as shown.

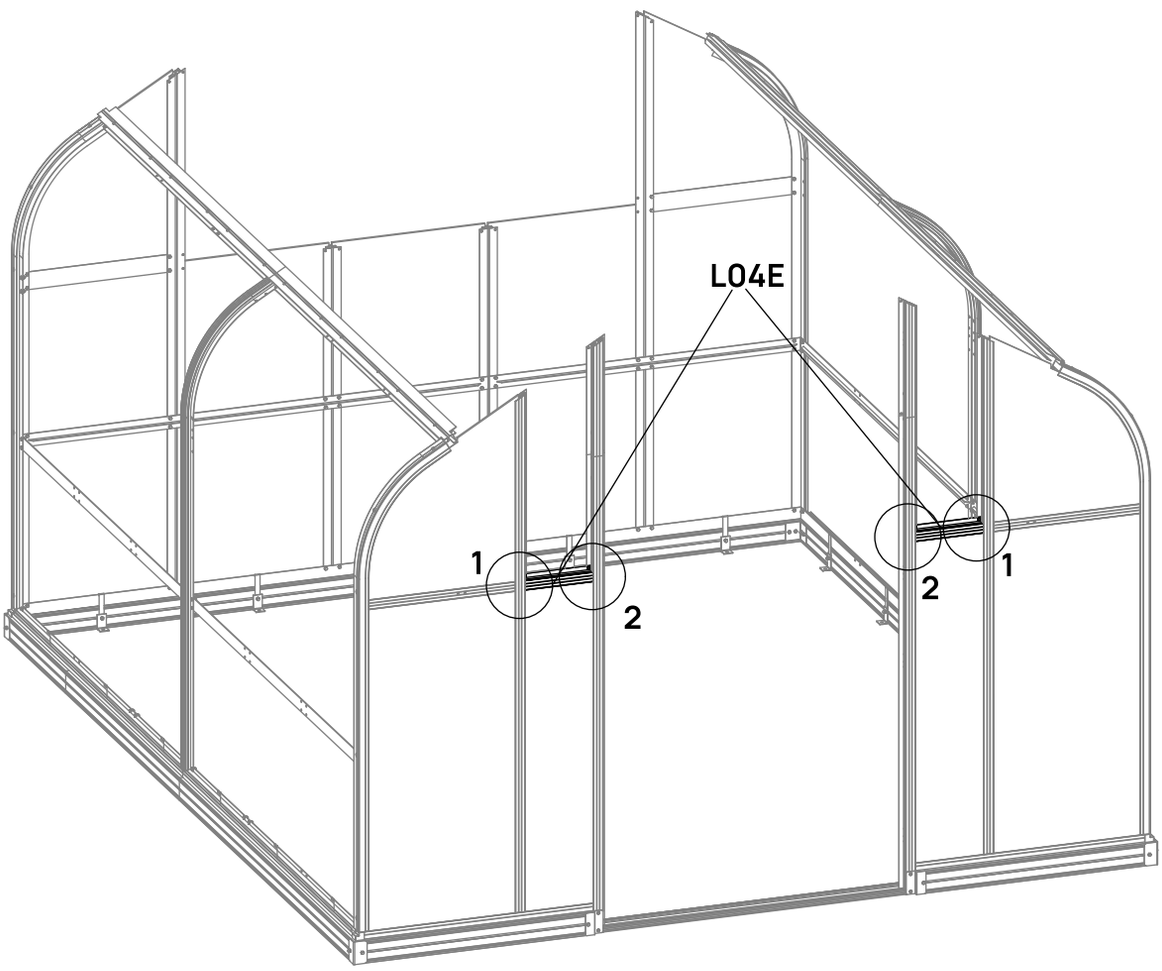

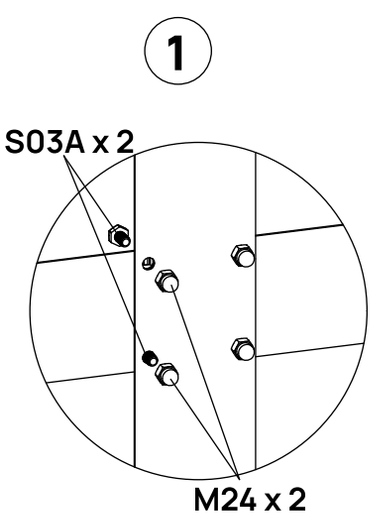

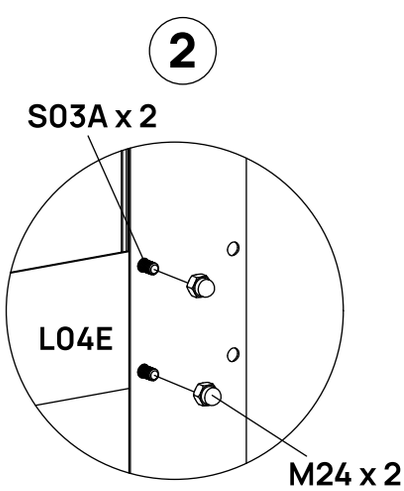

STEP

17

Assemble L04D frames as shown, then slide Y8 and Y5 panels into place.

BOX	PART	NO	QTY
ALBOX-4		L04D	4
PCBOX-3		Y5	4
PCBOX-2		Y8	4
ALBOX-4		S03A M6X10	8
ALBOX-4		M24 M6	8
PCBOX-2		H158	1

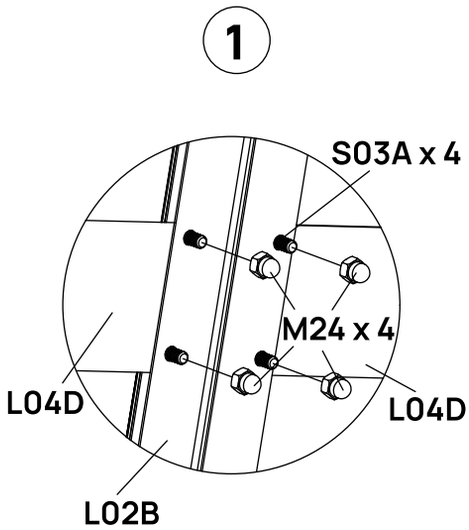

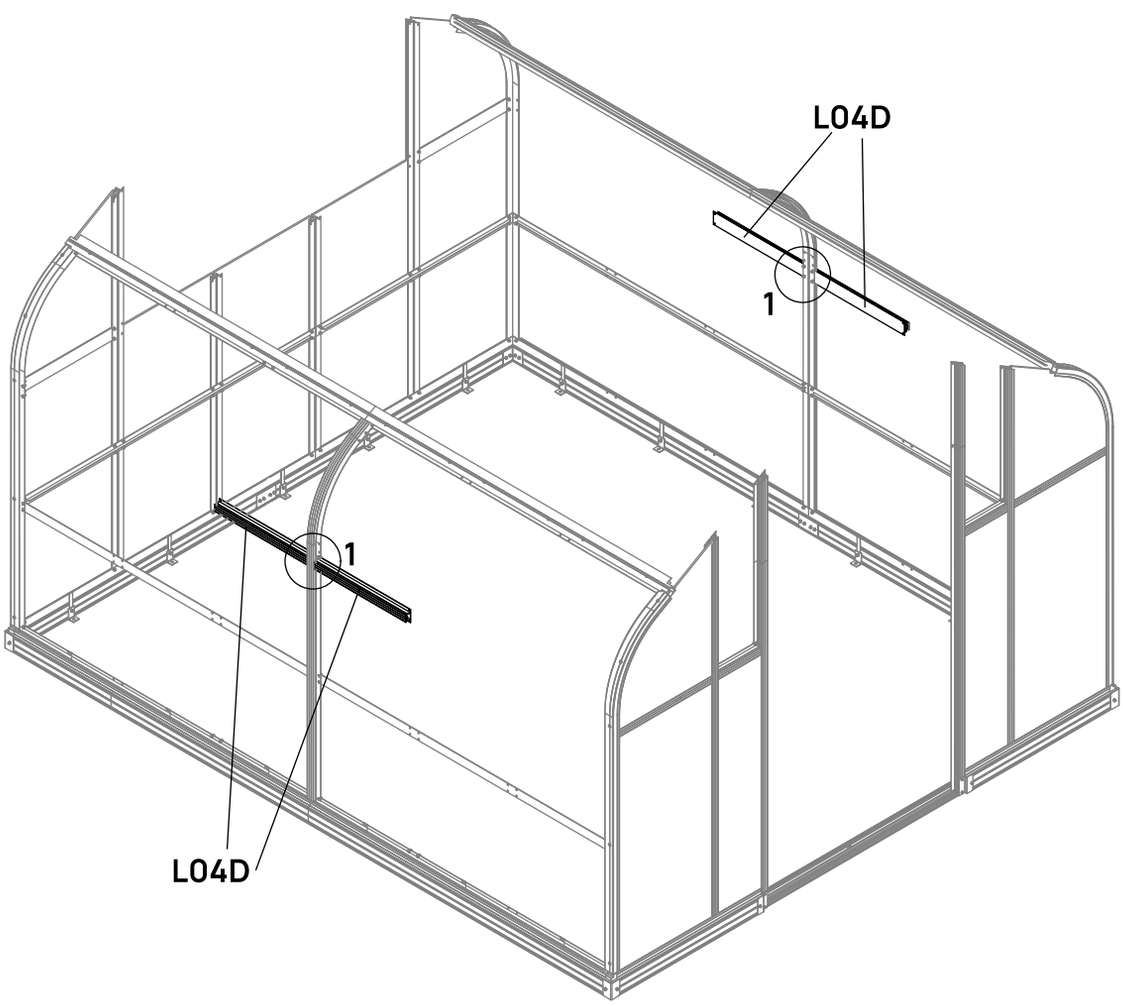

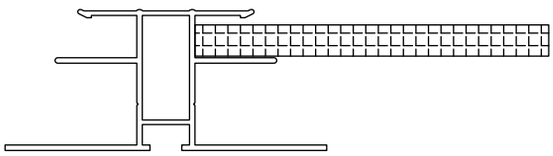

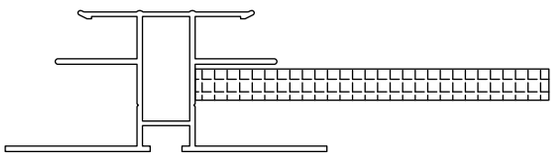

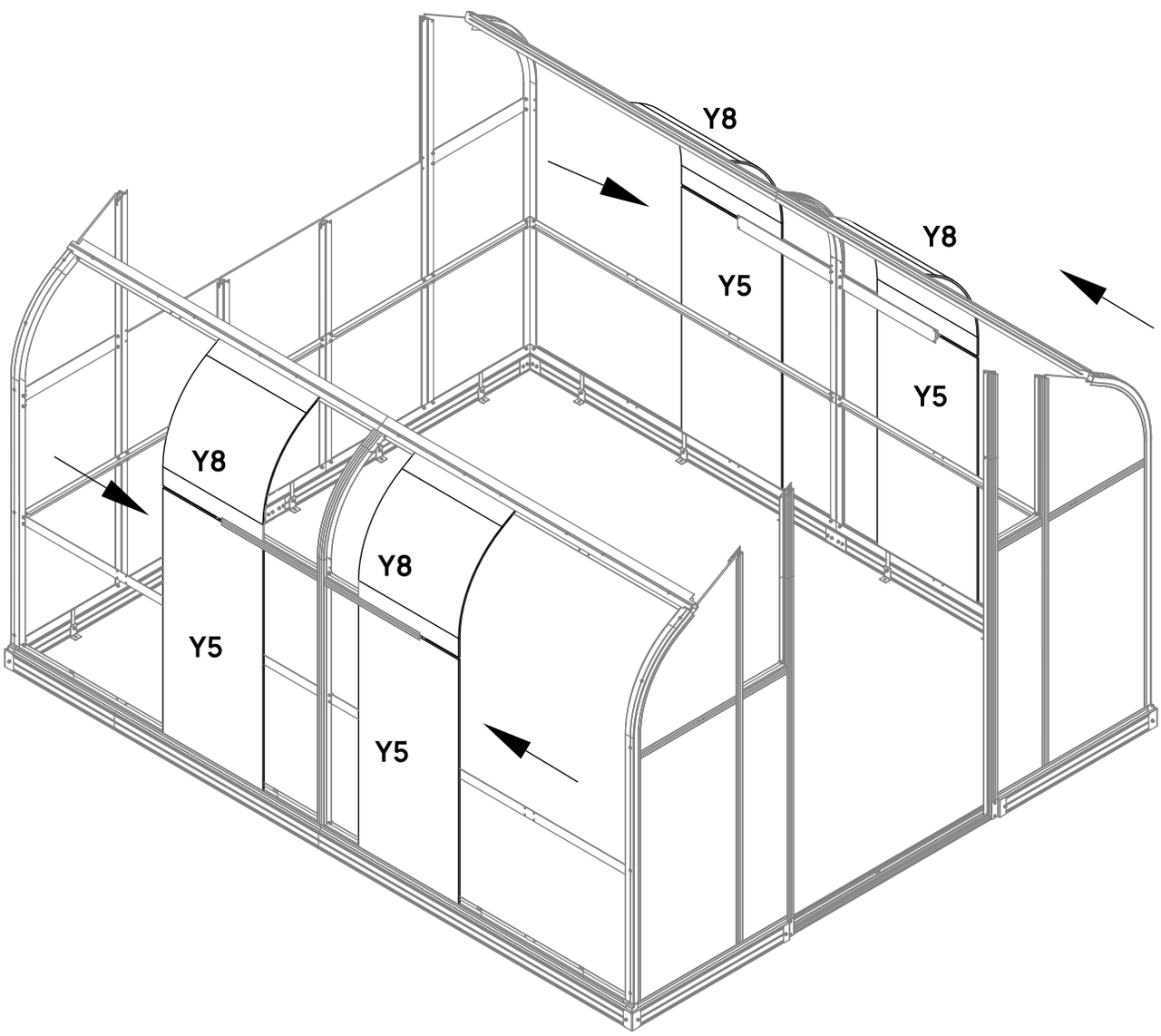
Y8
Y8
Y5
Y5
Y8
Y8
Y5
Y5

STEP

18

Assemble additional L02B frames on both sides as shown.

BOX	PART	NO	QTY
ALBOX-1		L02B	4
ALBOX-4		S03A M6X10	40
ALBOX-4		M24 M6	40

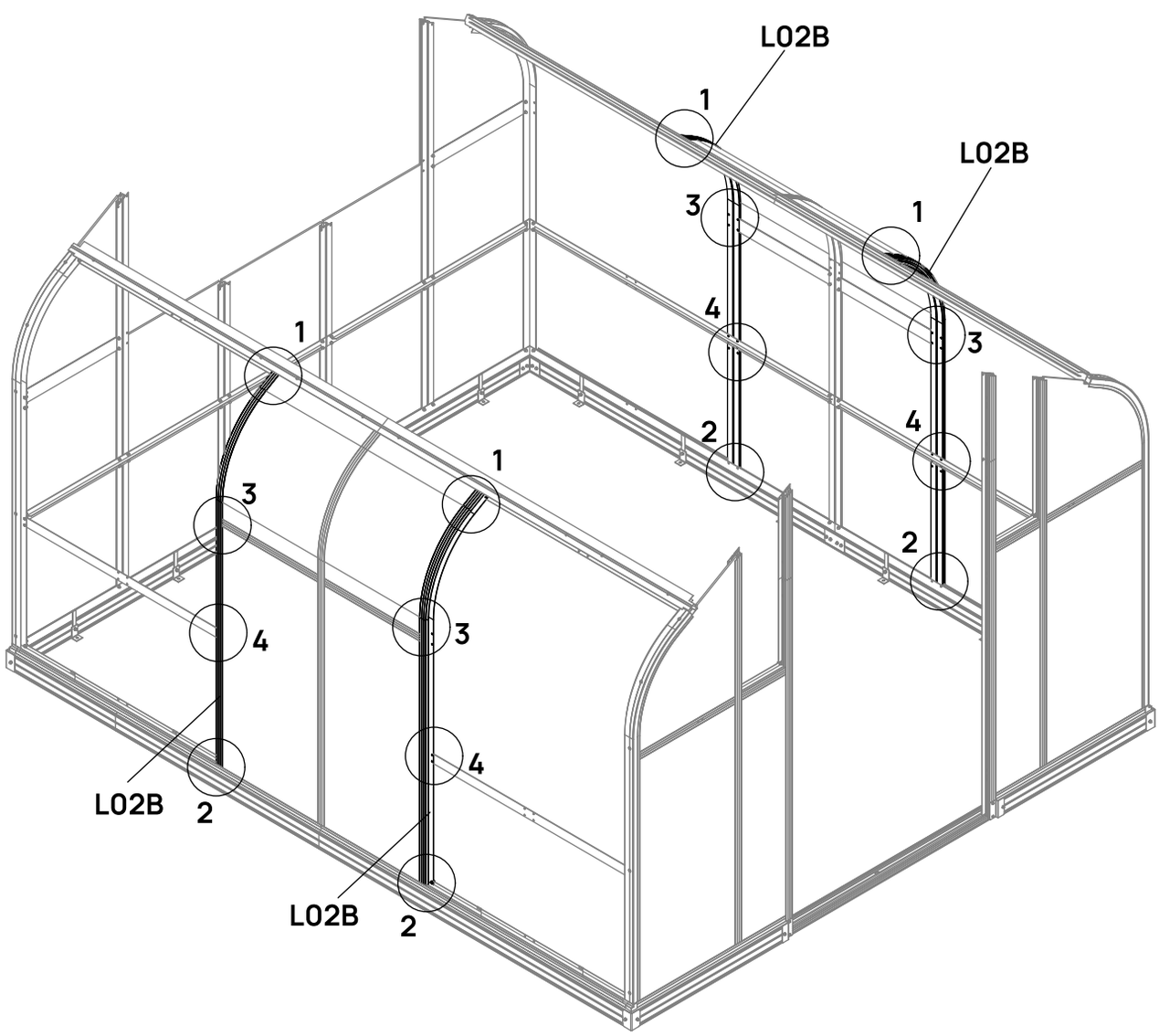

1

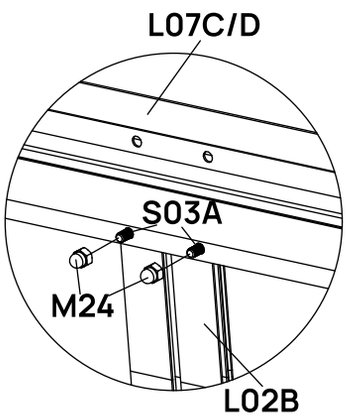

2

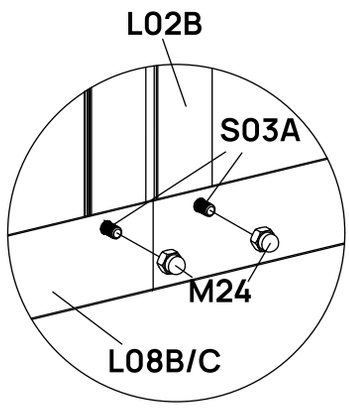

3

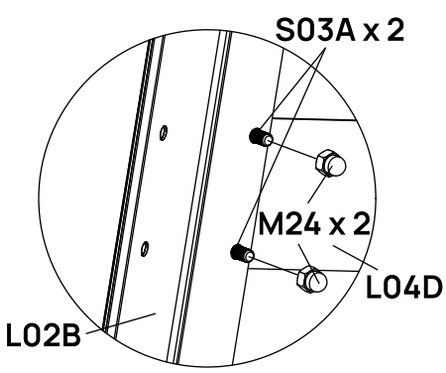

4

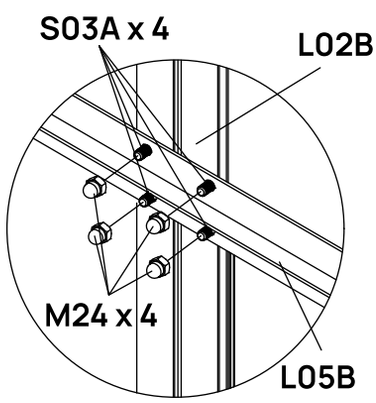

vegogarden.com

STEP

19

Assemble 6 sets of support braces as shown, then attach them to the curve frames.

BOX	PART	NO	QTY
ALBOX-4		L05E	6
ALBOX-1		D467	12
Pre-installed		S01A M6X12	24
ALBOX-4		S03A M6X10	48
ALBOX-4		M24 M6	48

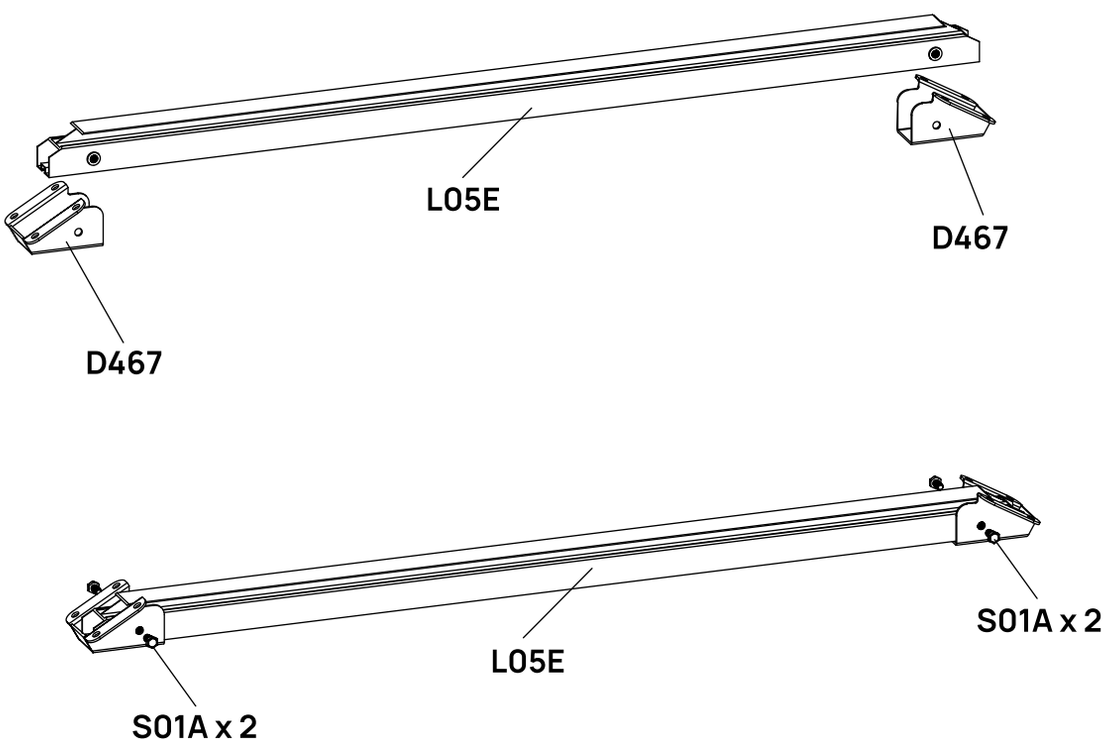

X6

1

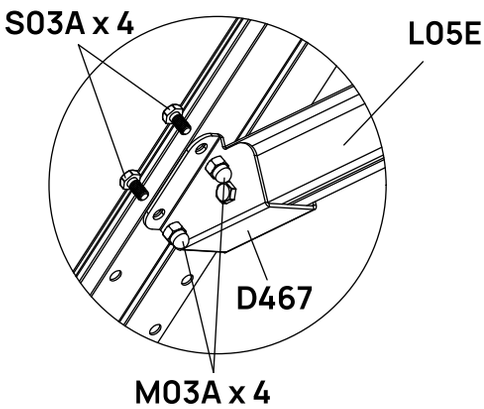

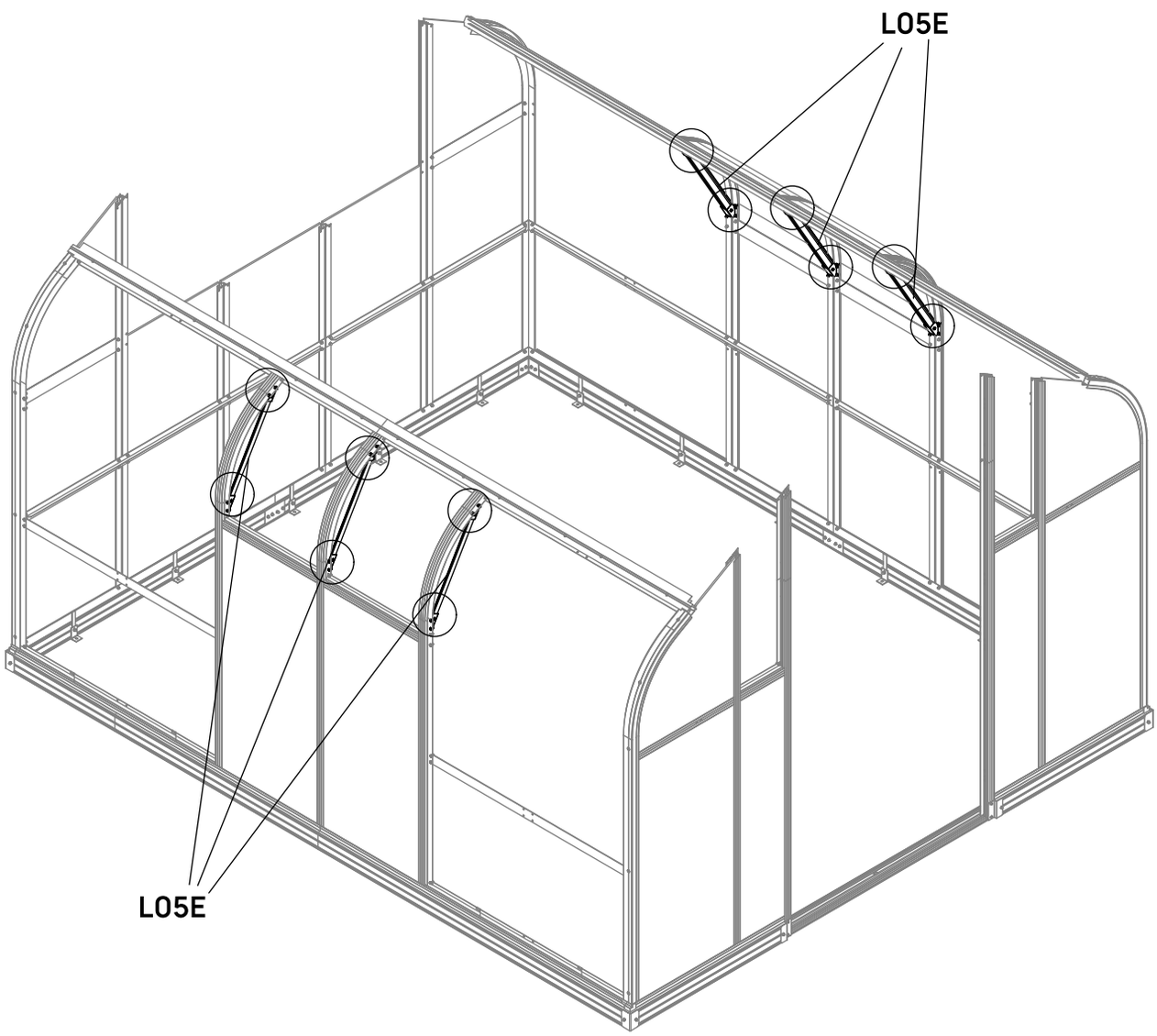

STEP

20

Assemble L04D and L40B frames as shown.

BOX	PART	NO	QTY
PCBOX-1		L04B	2
ALBOX-4		L04D	4
PCBOX-3		Y5	2
PCBOX-2		Y8	4
PCBOX-3		Y20	2
ALBOX-4		S03A M6X10	10
ALBOX-4		M24 M6	10
PCBOX-2		H158	1

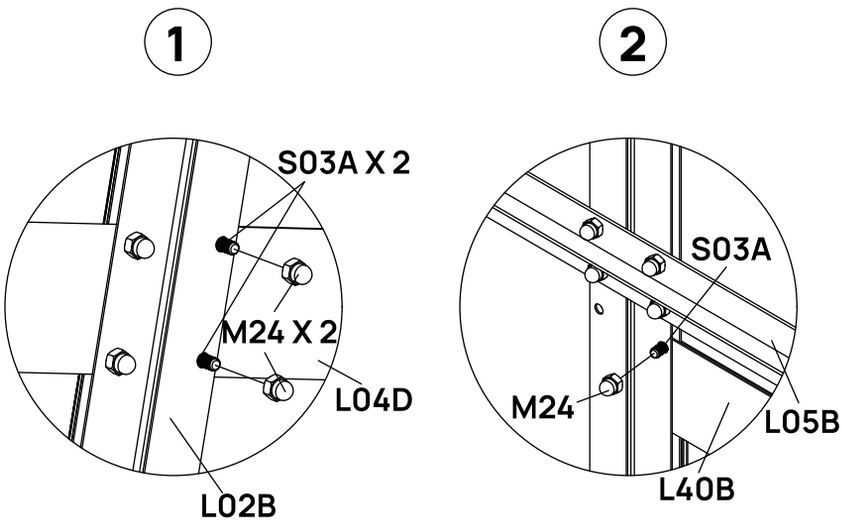

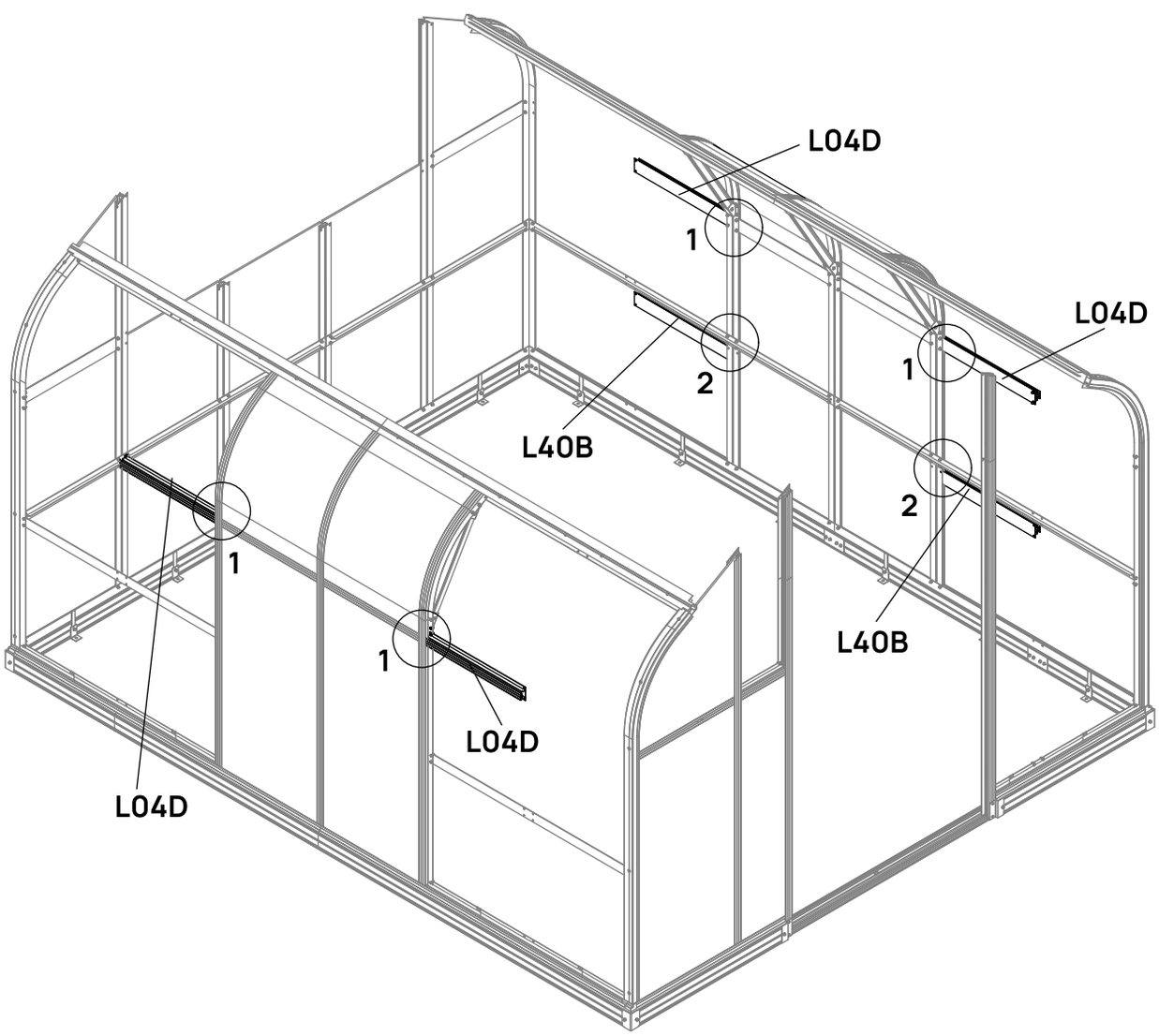

STEP
21

Slide Y8, Y5 and Y20 panels into place as shown.

Note: The positions of Y20 panels are where the louvered windows will be installed.

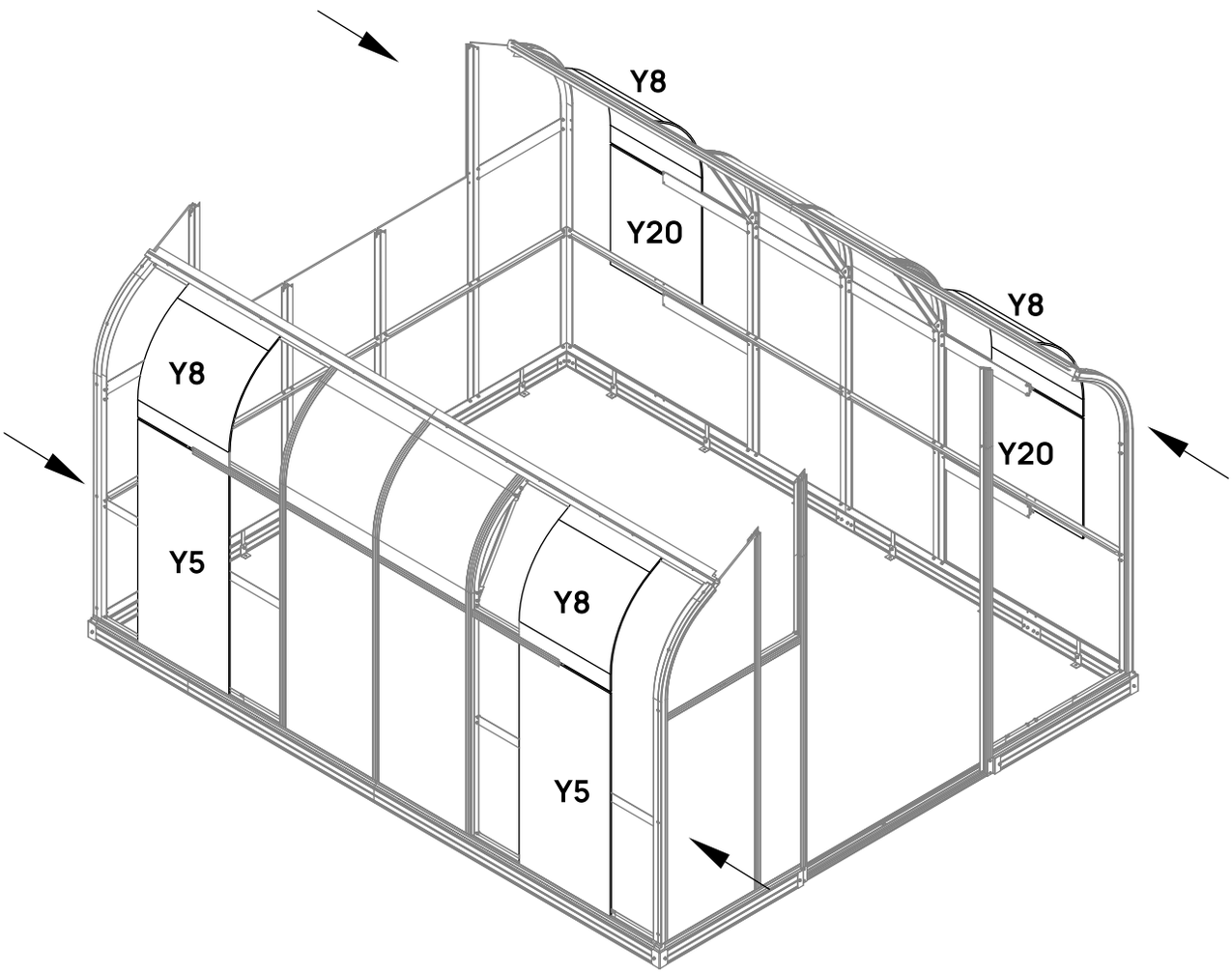

STEP

22

Assemble L02A curve frames as shown.

BOX	PART	NO	QTY
ALBOX-1		L02A	4
ALBOX-4		S03A M6X10	42
ALBOX-4		M24 M6	42

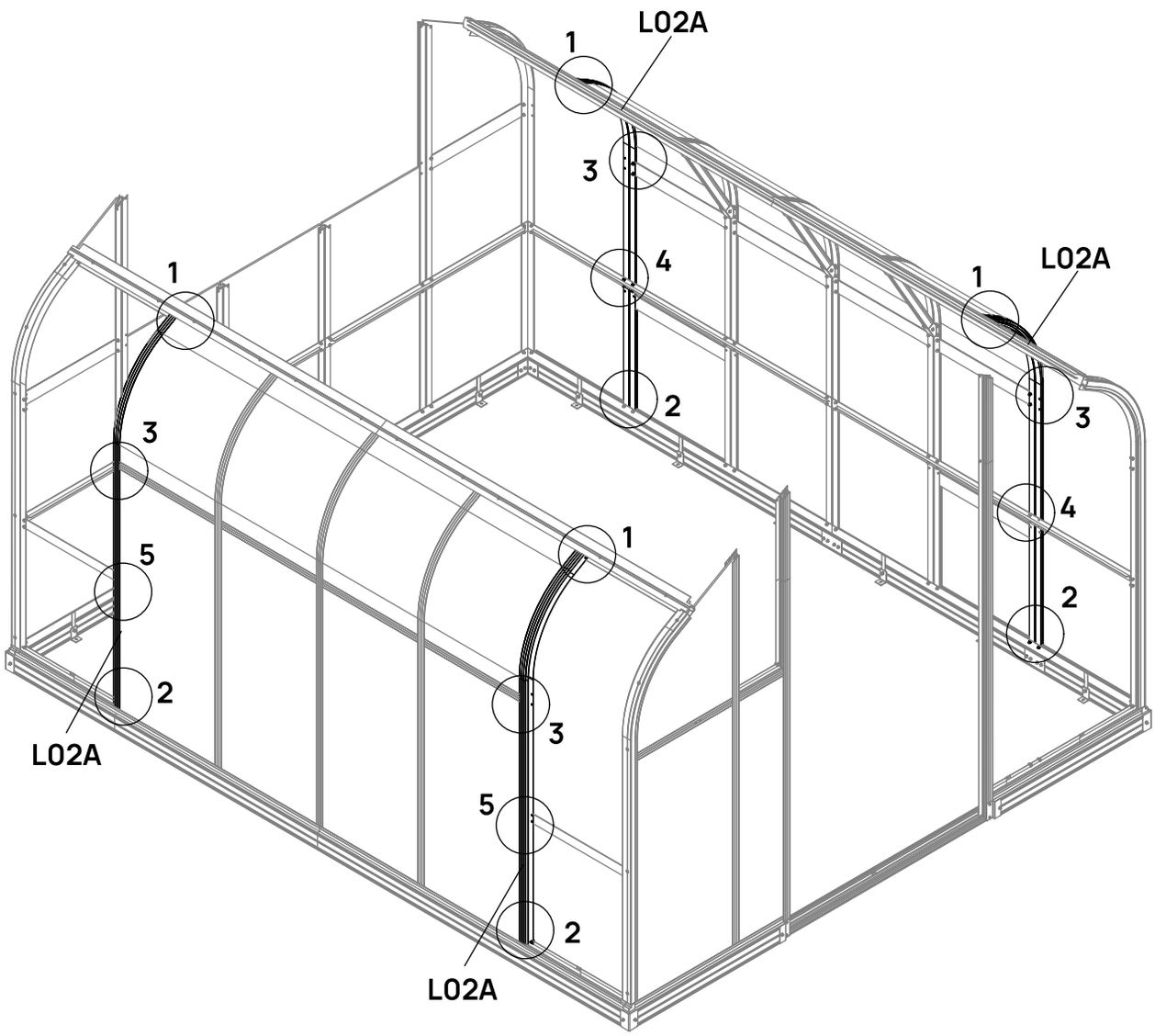

1

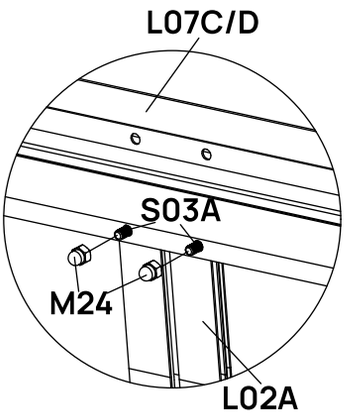
L07C/D
S03A
M24
L02A

2

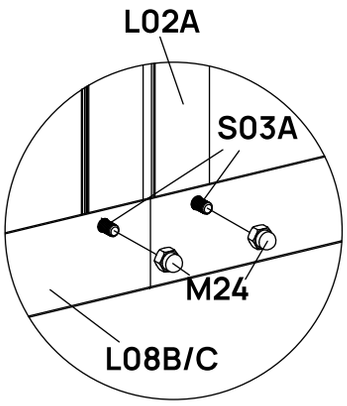
L02A
S03A
M24
L08B/C

3

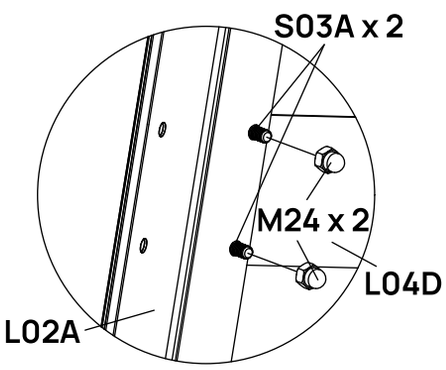
S03A x 2
M24 x 2
L04D
L02A

4

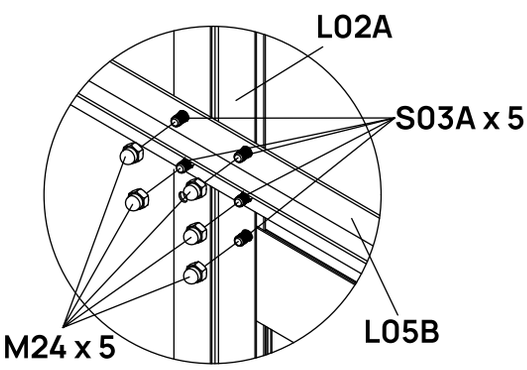
L02A
S03A x 5
M24 x 5
L05B

5

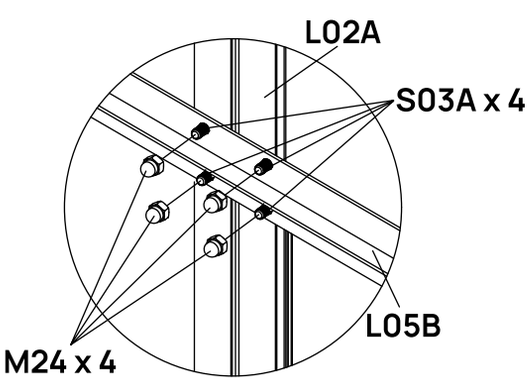
L02A
S03A x 4
L05B
M24 x 4

STEP

23

Assemble the last L04D frames as shown, then slide the last Y8 and Y5 panels into place.

BOX	PART	NO	QTY
ALBOX-4		L04D	4
PCBOX-3		Y5	4
PCBOX-2		Y8	4
ALBOX-4		S03A M6X10	16
ALBOX-4		M24 M6	16
PCBOX-2		H158	1

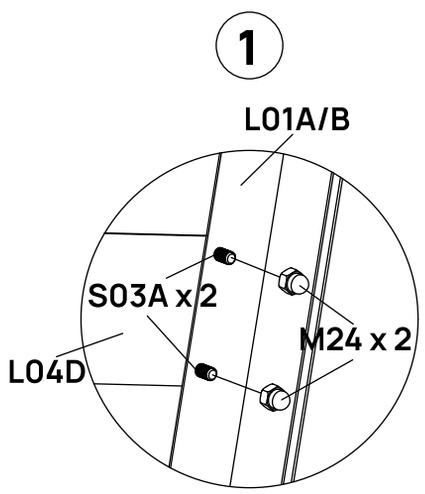

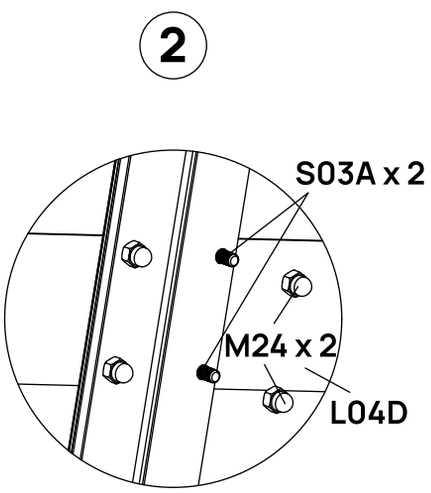

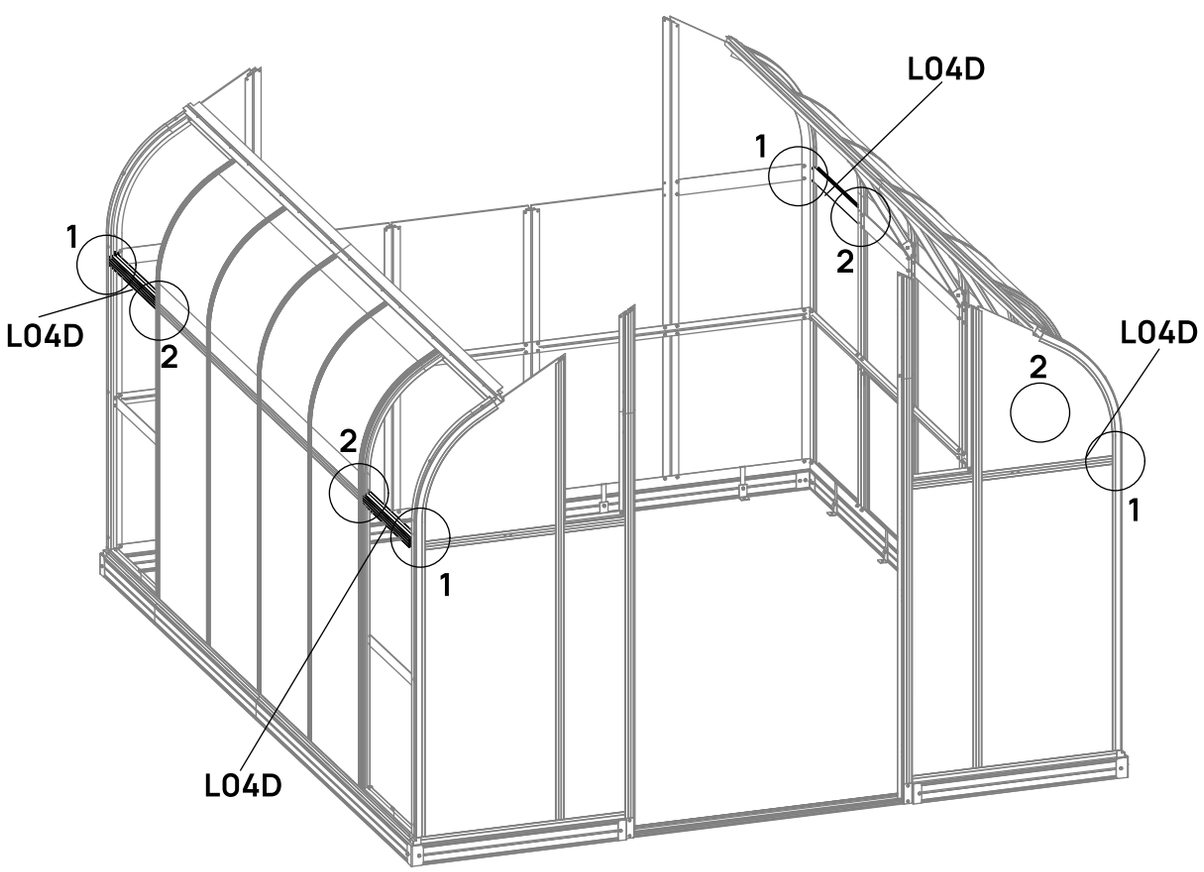

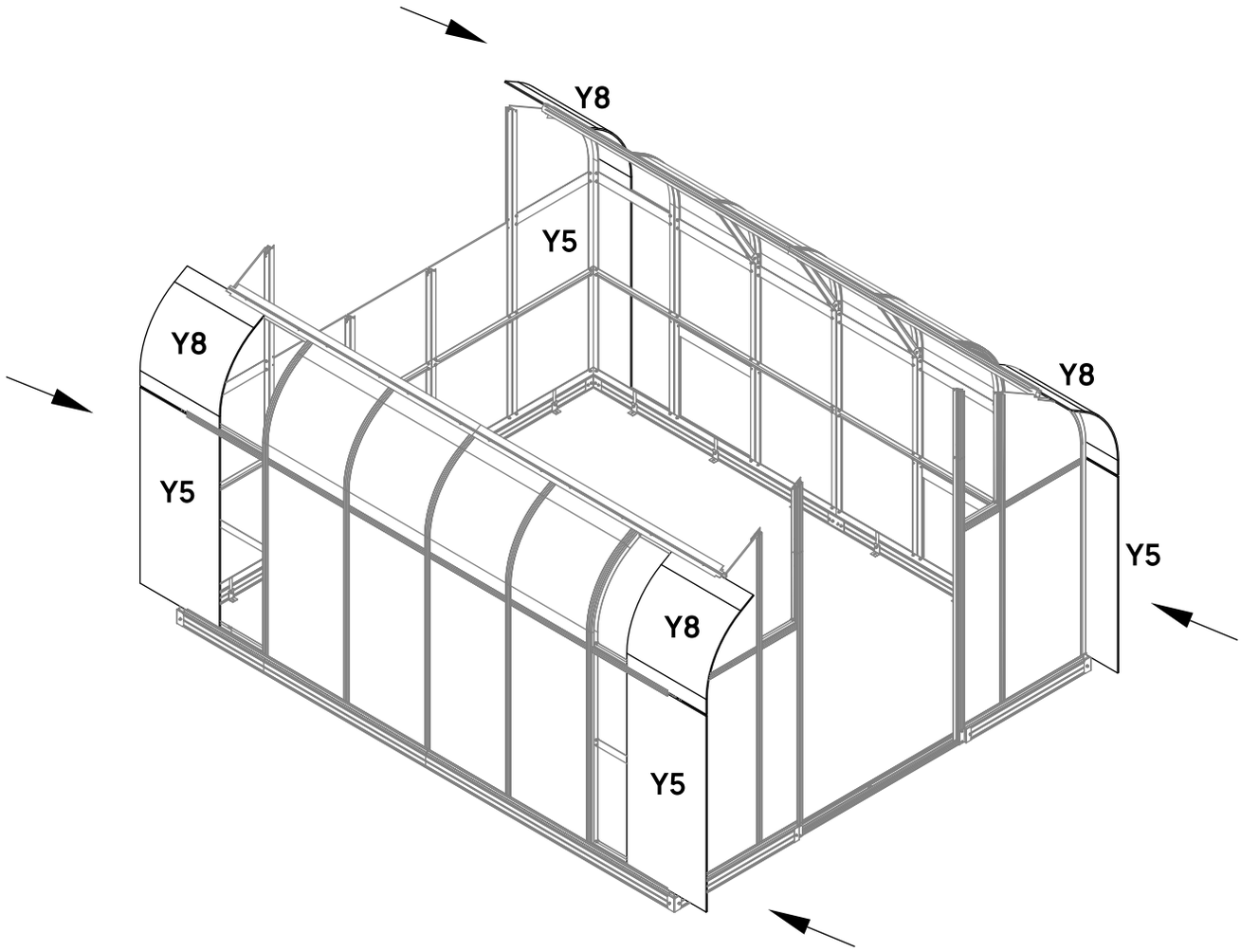

vegogarden.com

STEP

24

Remove the pre-installed S21A bolts from the four corner curve frames.
Attach L12A/B corner cover frames onto L01 frames to secure the outermost PC panels as shown, using the removed S21A bolts.

BOX	PART	NO	QTY
ALBOX-1		L12A	2
ALBOX-1		L12B	2
Pre-installed		S21A M6X10	20
PCBOX-2		H158	1

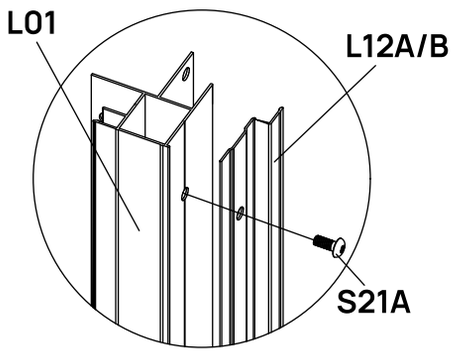

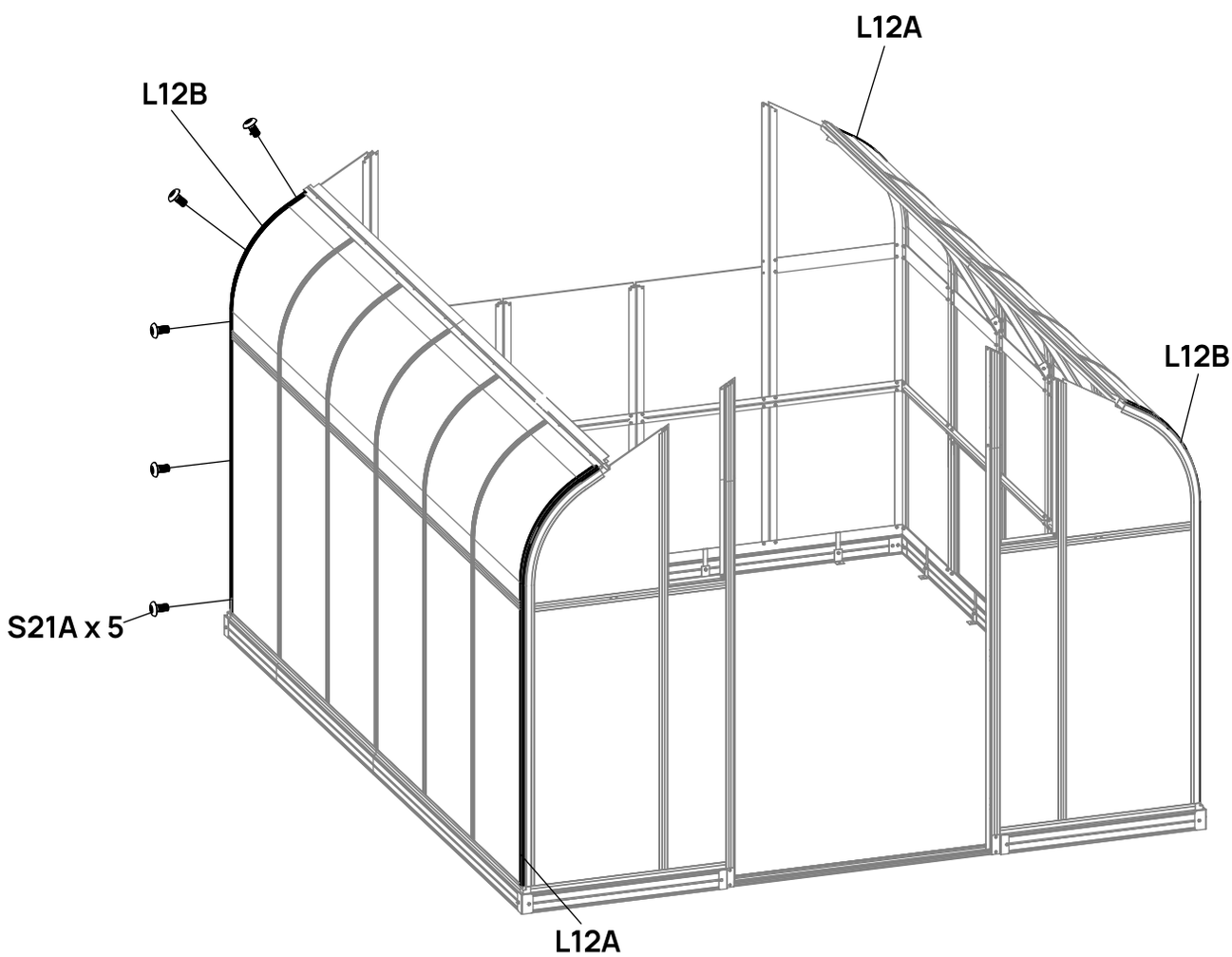

STEP

25

Assemble L04F/G/H and L03H/J frames as shown.

Note: Different hardware is required for top and bottom holes on L03

Top holes: S03A, M24

Bottom holes: S27A, H137, M31

BOX	PART	NO	QTY
ALBOX-3		L03J	1
ALBOX-2		L03H	1
ALBOX-3		L04F	1
ALBOX-3		L04G	1
ALBOX-4		L04H	1
ALBOX-4		S03A / M6X10	16
ALBOX-4		M24 / M6	16
ALBOX-4		S27A / M5X12	2
ALBOX-4		M31 / M5	2
ALBOX-4		H137	4

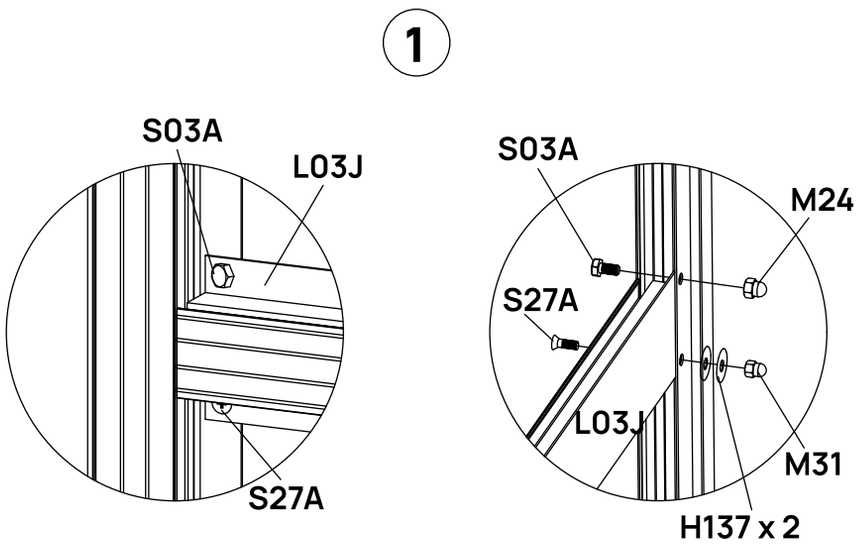

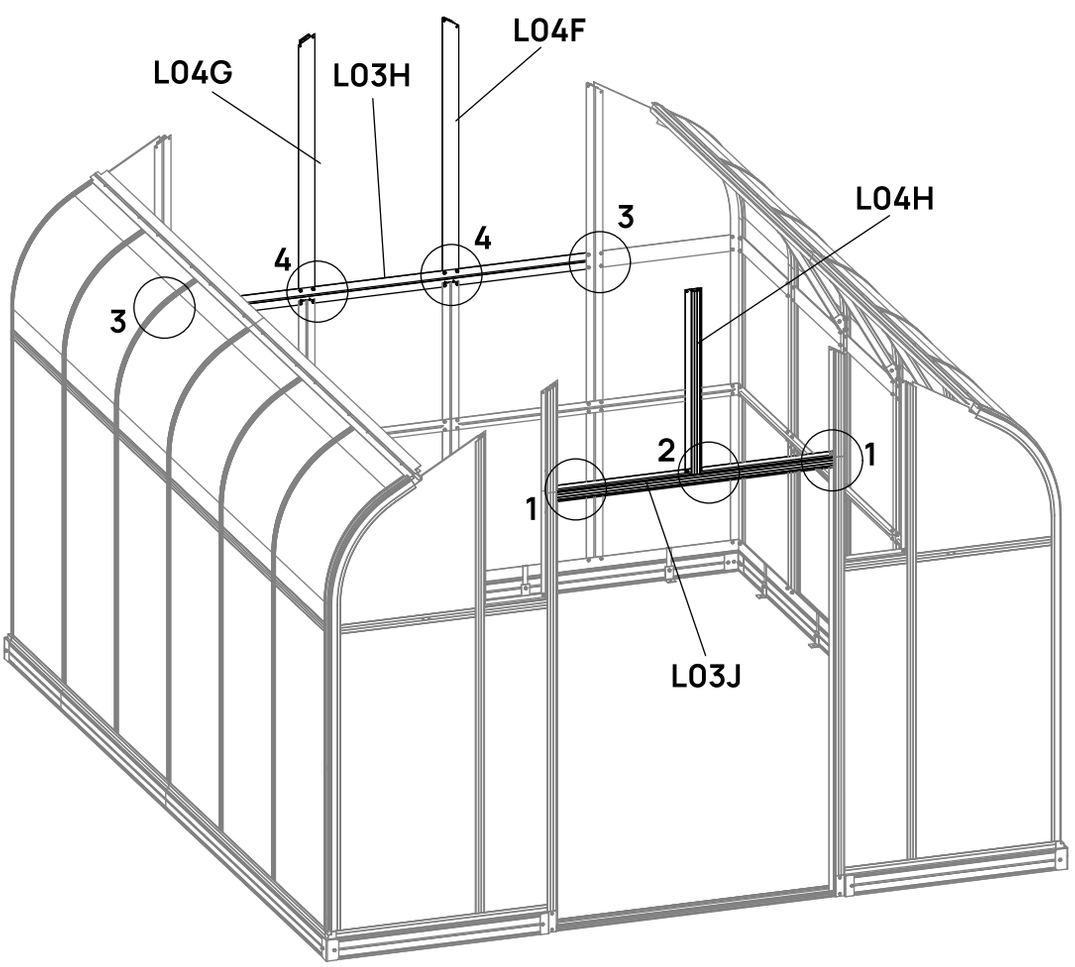

2

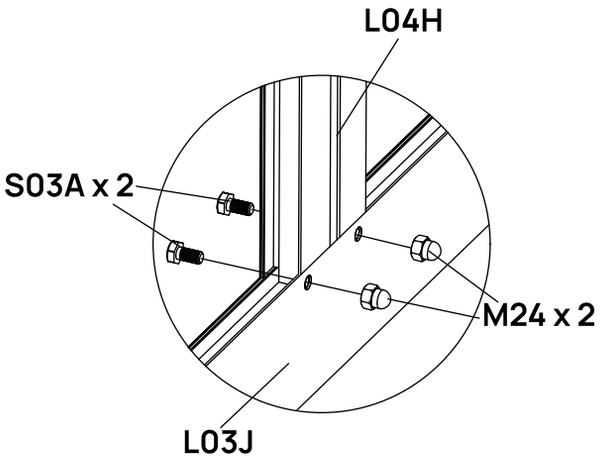
L04H
S03A x 2
M24 x 2
L03J

3

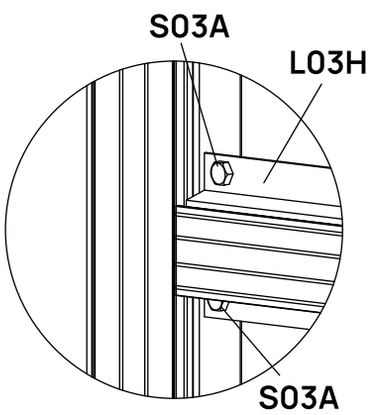
S03A
L03H
S03A

4

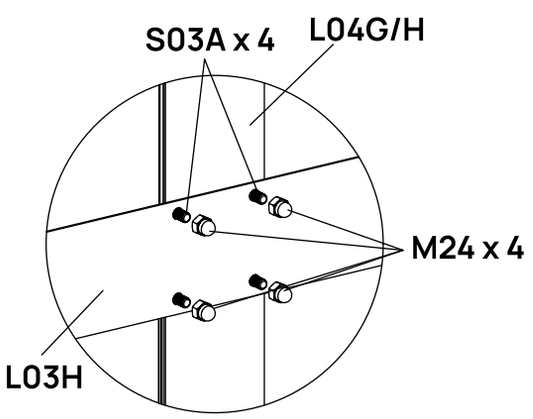
S03A x 4
L04G/H
M24 x 4
L03H

STEP

26

Remove the pre-installed S26A bolts from L04 frames, then attach the gutter frames onto L04 frames as shown, using S26A.

BOX	PART	NO	QTY
ALBOX-2		L27B	4
ALBOX-4		D25	2
ALBOX-4		S03A M6X10	4
ALBOX-4		M24 M6	4
Pre-installed		S26A M5X12	24

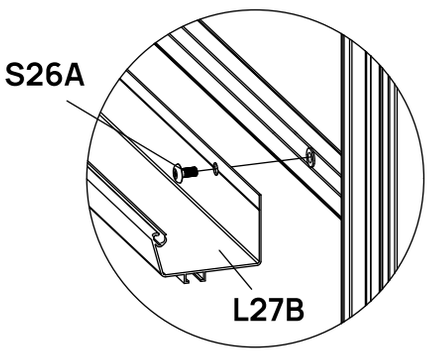

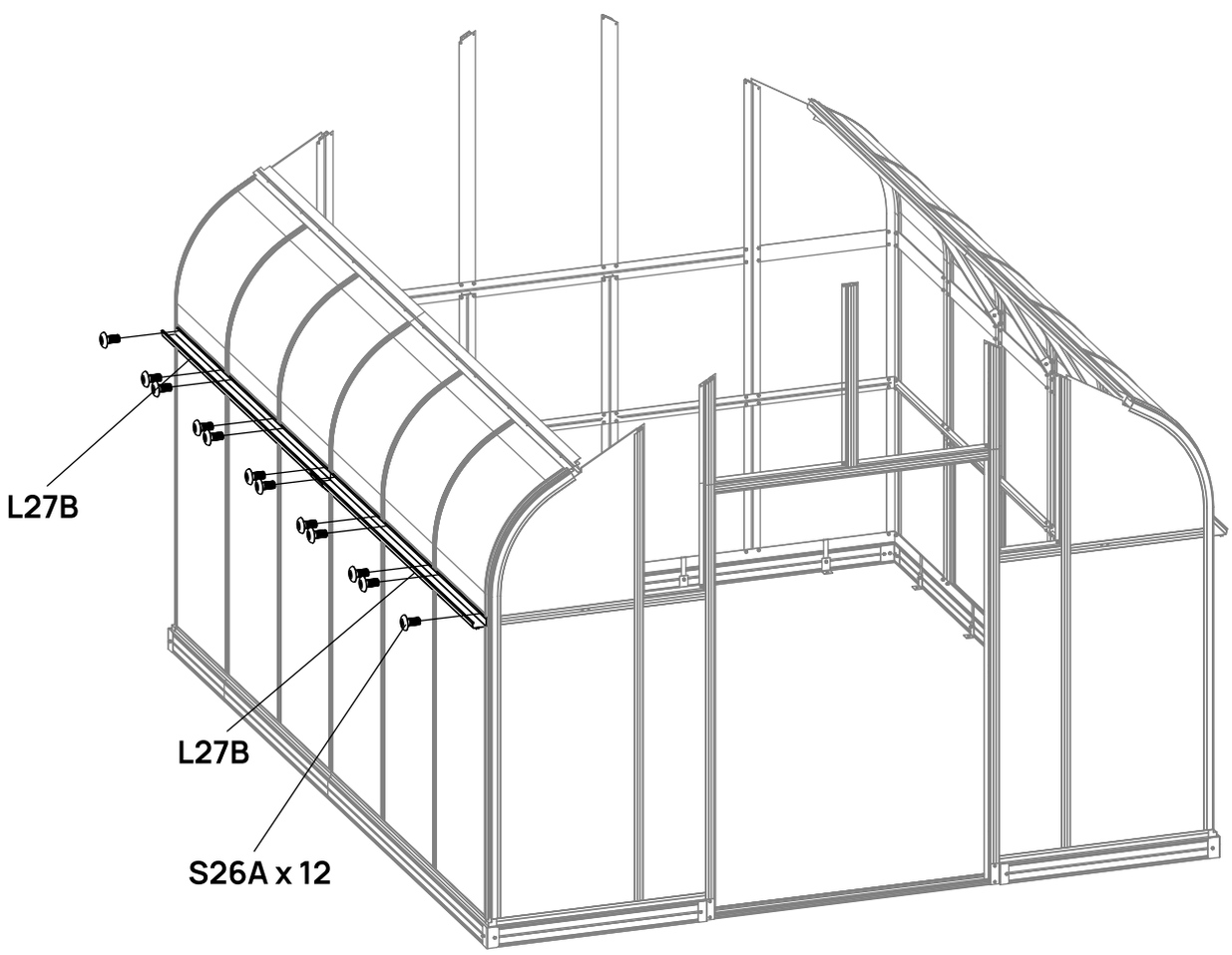

Slide S03A bolts in the grooves of the frames, position them as shown in the diagram. Secure the D25 gutter connectors with M24 nuts.

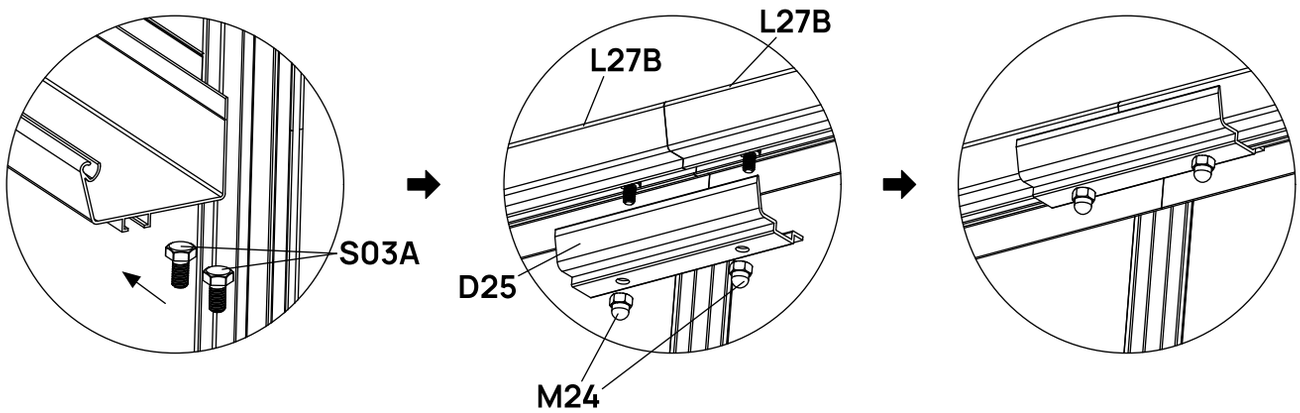

Apply silicone caulk (not provided) between the gaps of each gutter frame pieces, as well as the gaps between eave frames and gutter frames to seal.

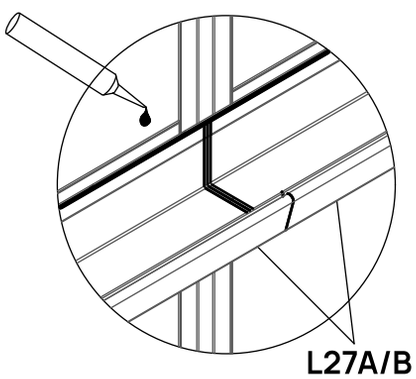

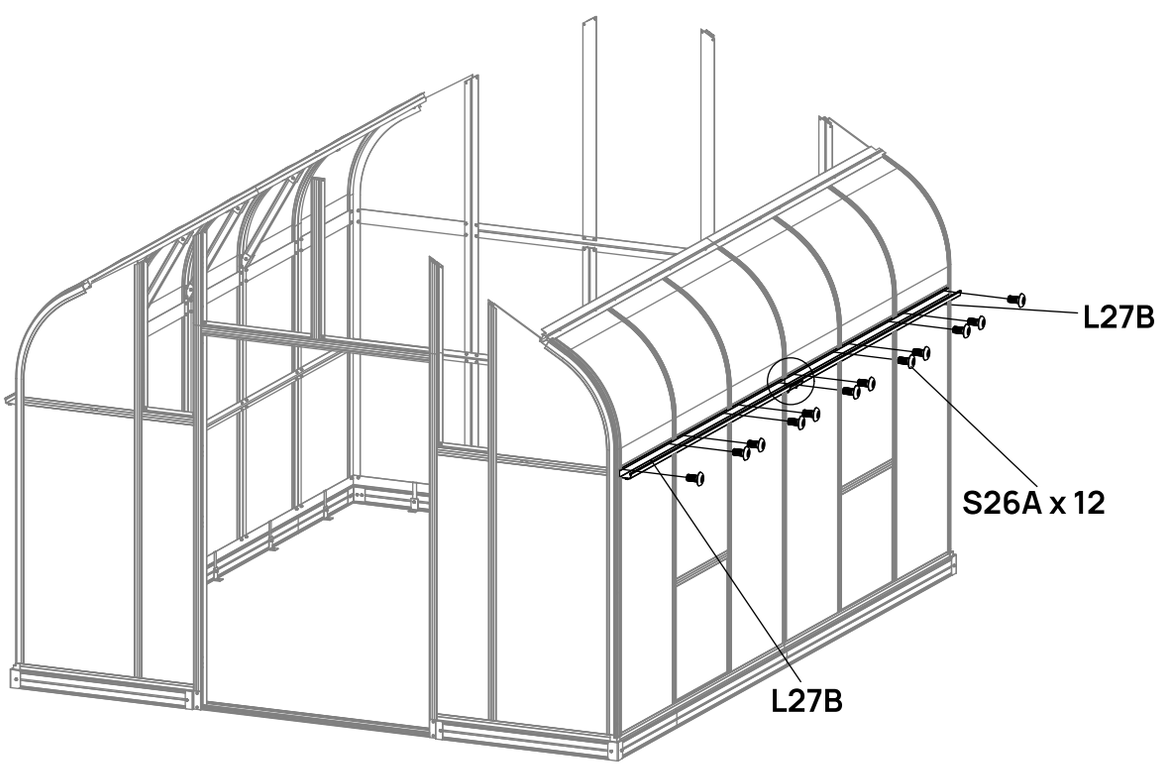

STEP

27

Slide the gutter cover in place as shown, test to make sure the cover can flip open easily.

BOX	PART	NO	QTY
ALBOX-2		L28B	4

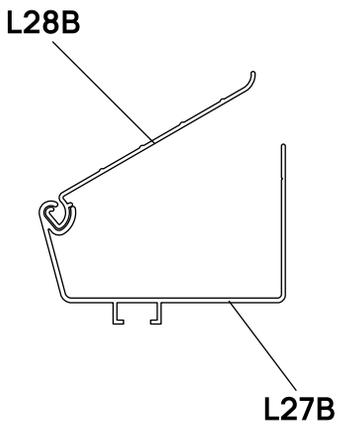

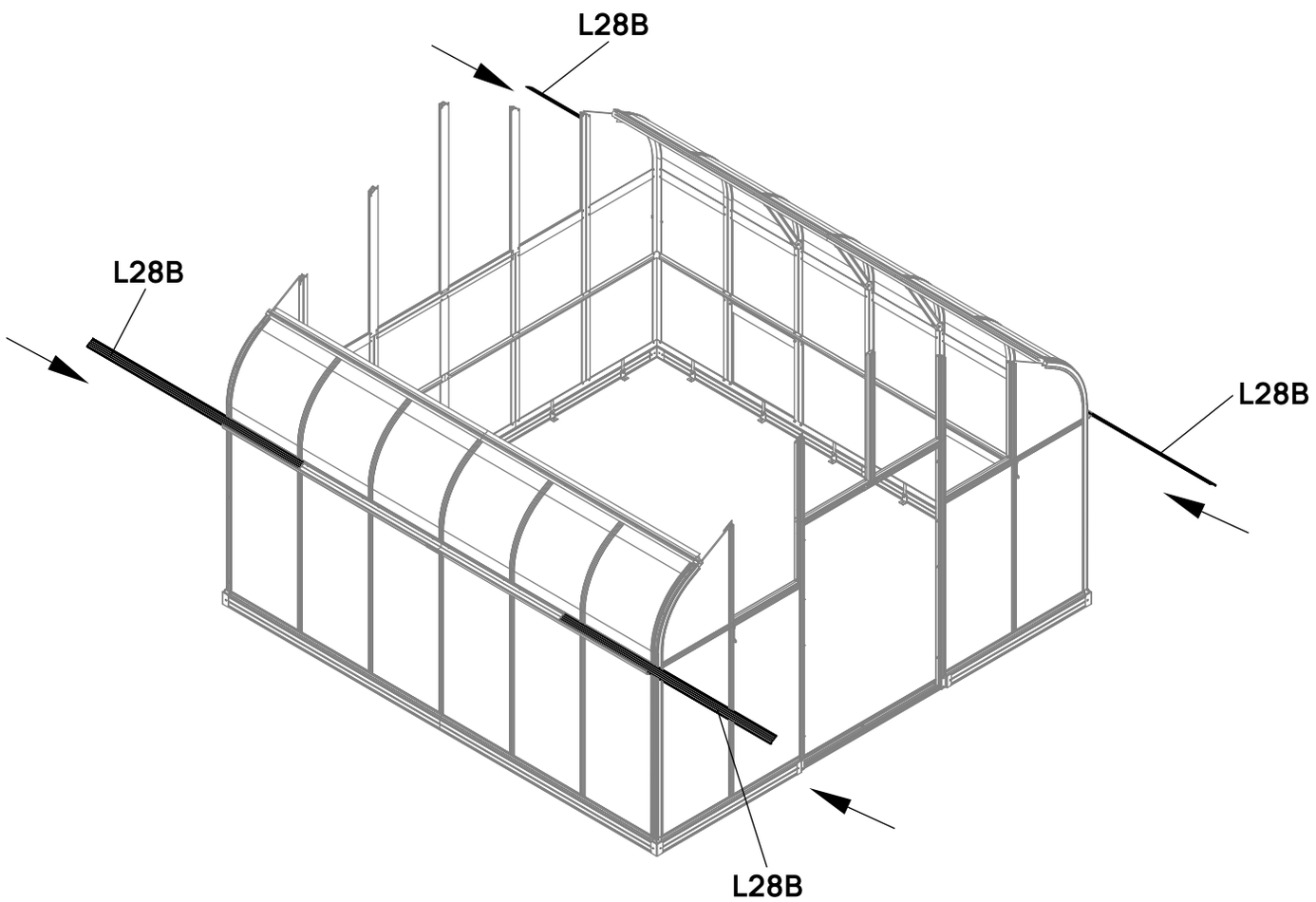

STEP

28

Insert the front and back gable panels as shown.

BOX	PART	NO	QTY
ALBOX-3		L01C	1
ALBOX-3		L01D	1
ALBOX-3		L01E	1
ALBOX-3		L01F	1
ALBOX-4		S03A M6X10	22
ALBOX-4		M24 M6	22
PCBOX-3		Y3	1
PCBOX-3		Y4	1
PCBOX-3		Y12	1
PCBOX-3		Y13	1
PCBOX-3		Y14	1
PCBOX-3		Y15	1
PCBOX-3		Y16	1
PCBOX-2		H158	1

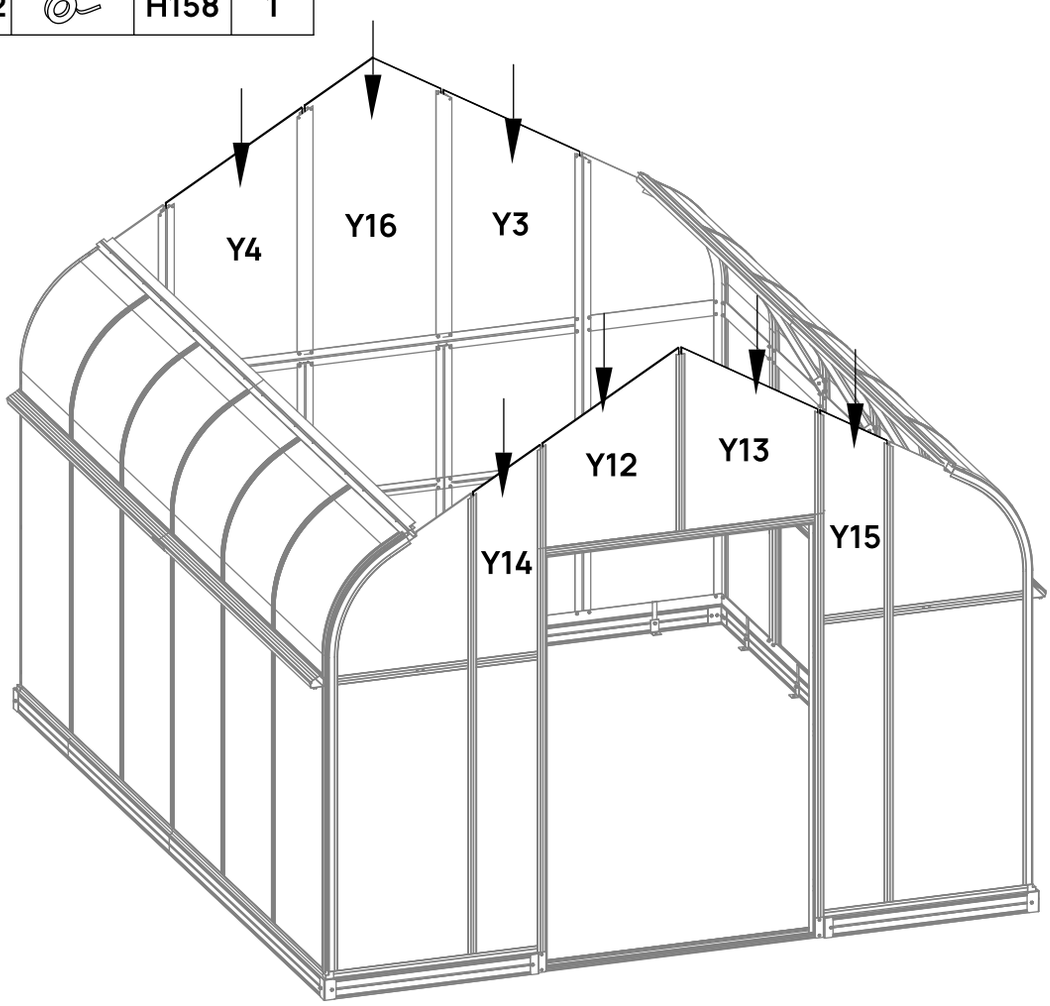

Assemble the front and back gable frames as shown.

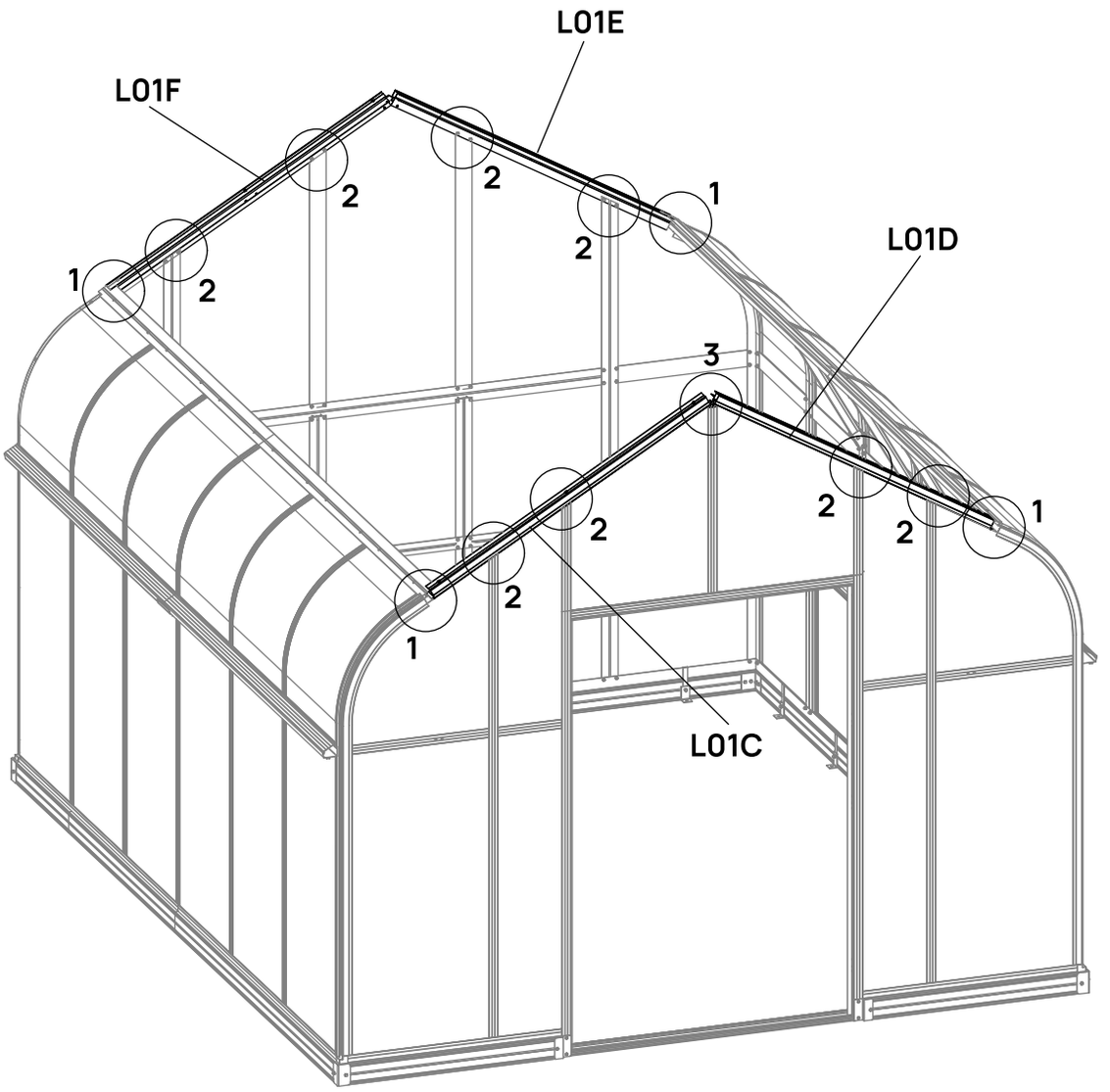

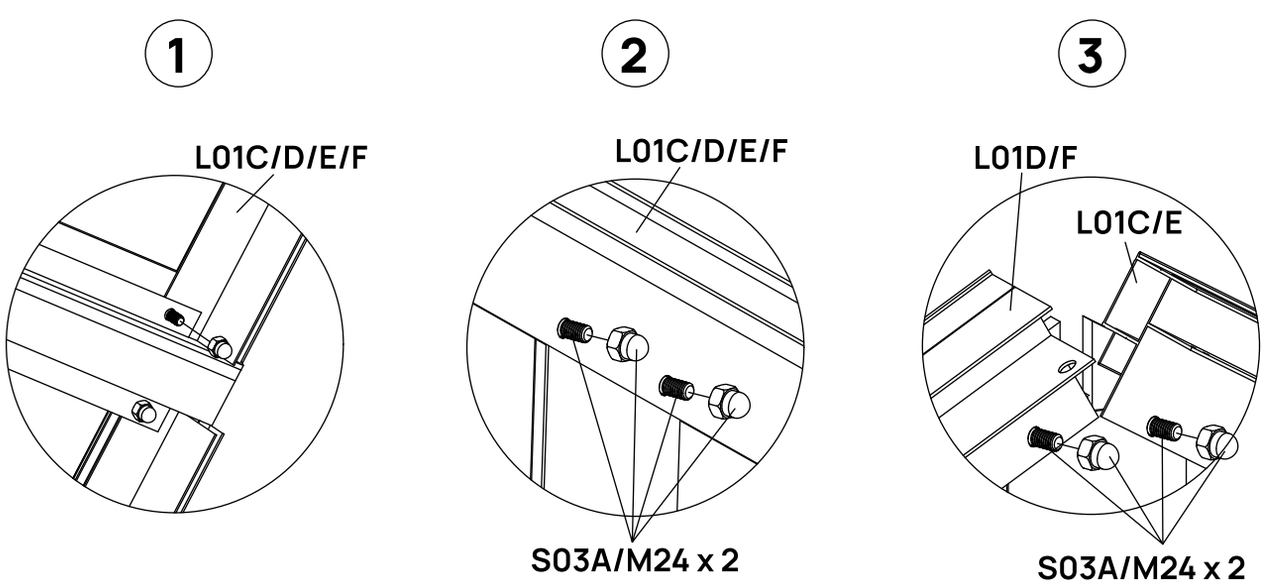

Louvered Window Assembly

STEP
01

Assemble the L42A and L42B frame to the K1 control frame as shown, secure with Z02A screws.

BOX	PART	NO	QTY
PCBOX-1		K1	2
PCBOX-1		K2	2
PCBOX-1		L42A	2
PCBOX-1		L42B	2
PCBOX-1		L44A	24
PCBOX-1		Y41	12
PCBOX-1		D530	6
PCBOX-1		D532	2
PCBOX-1		D534	2
PCBOX-1		D535	2
PCBOX-1		D536	2
PCBOX-1		H232	6
PCBOX-1		Z02A Ø4X16D	8
PCBOX-1		S101 M5X8	4
PCBOX-1		S103 M5X15	4
PCBOX-1		S92 M4X1 0	4
PCBOX-1		M30 M4	4
PCBOX-1		M18 M5	4

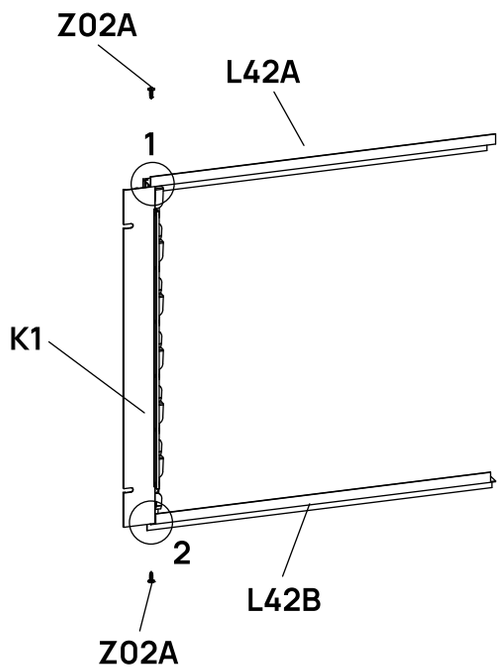

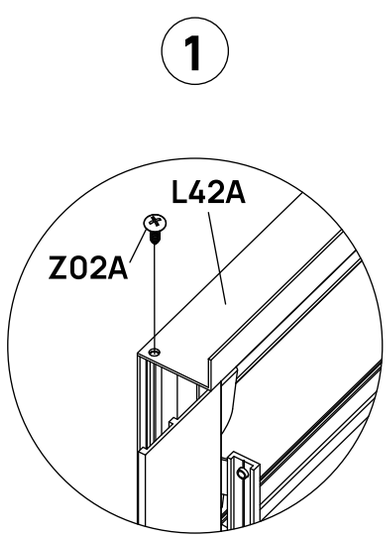

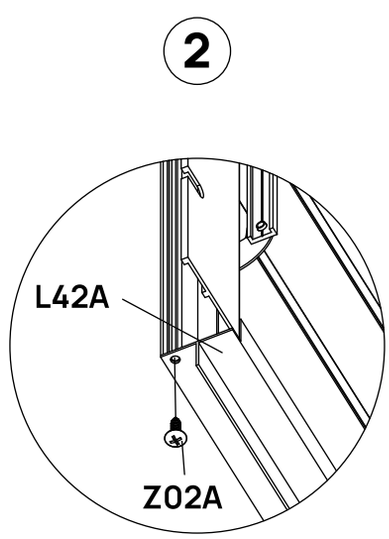

STEP
02

Assemble 6 sets of louver blades as shown.
Ensure the L44A trim profiles are oriented correctly.

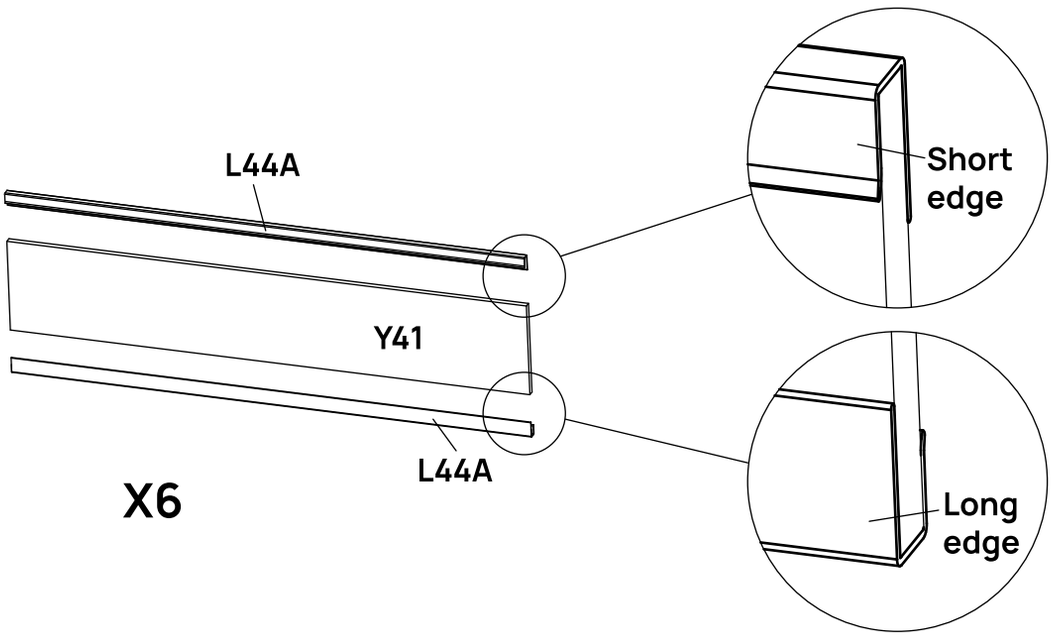

Insert all louver blades into the control frames, with the short edges of the L44A profiles facing inward and upward.

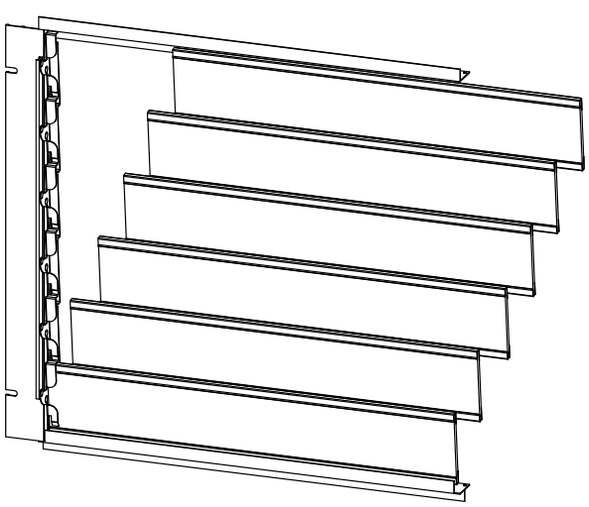

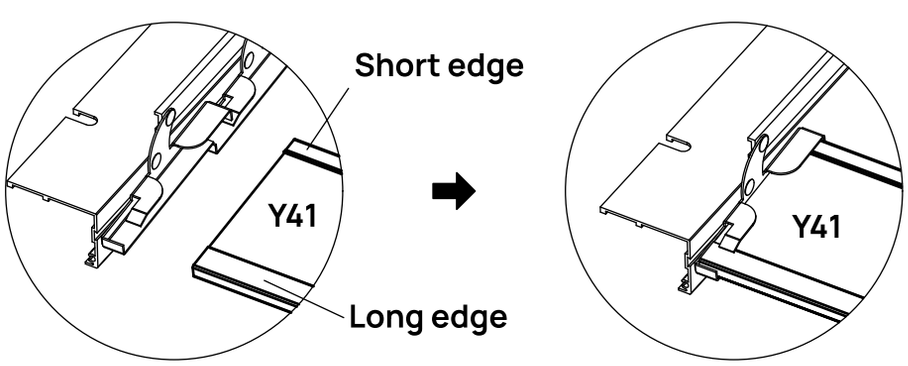

STEP

03

Assemble the louver control handle as shown, then attach it to the K2 control frame.

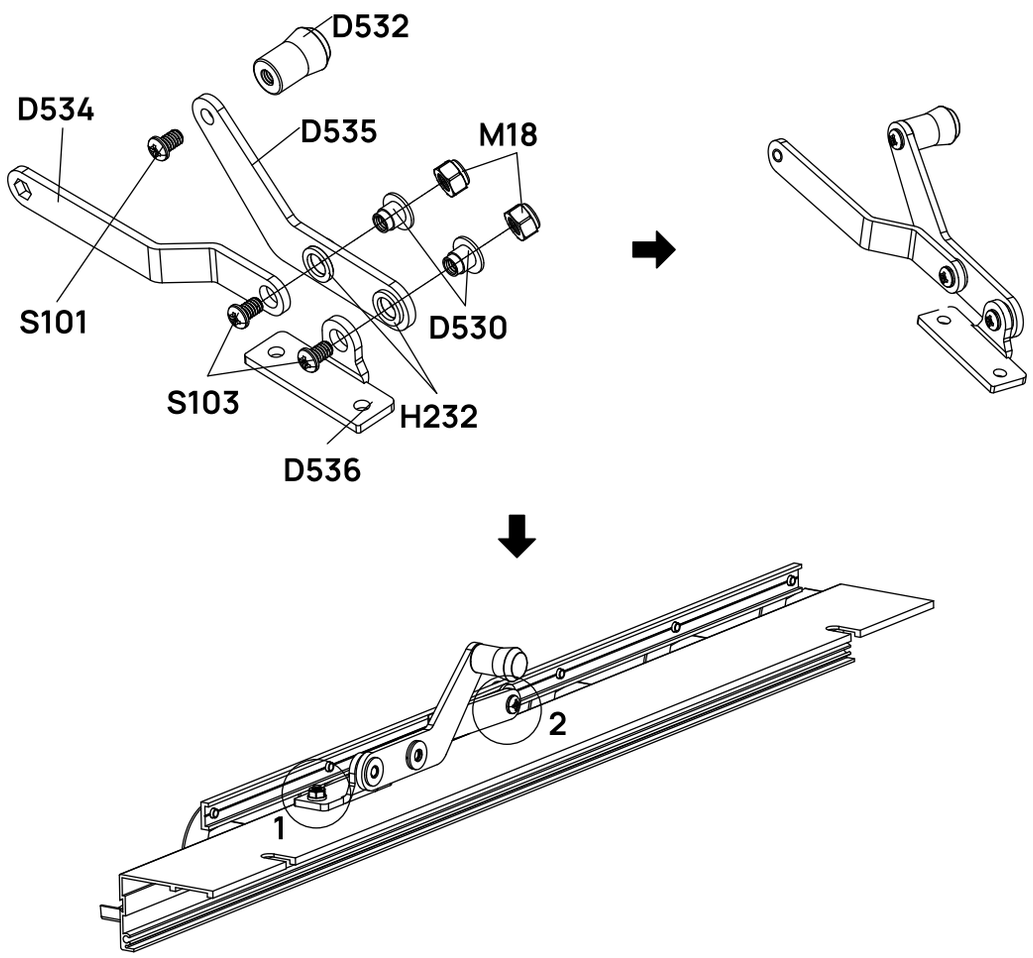

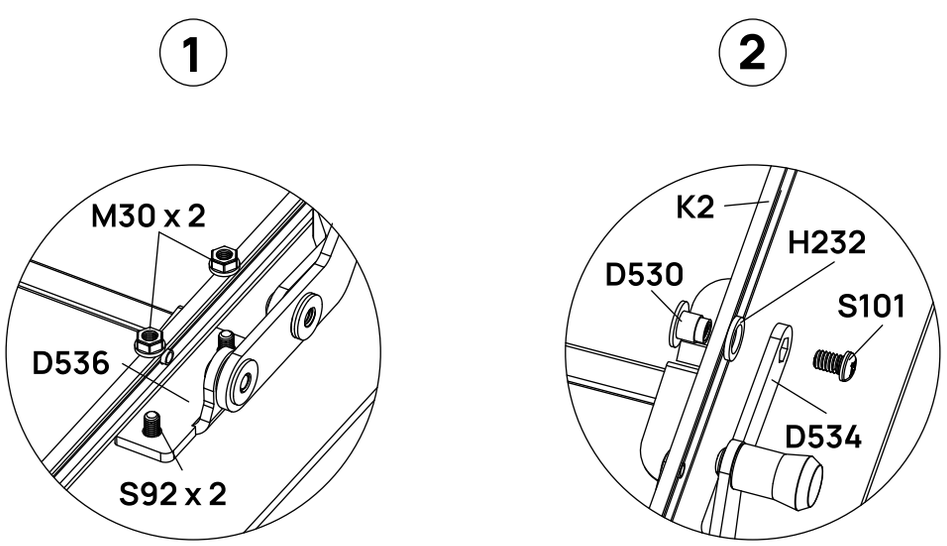

STEP

04

Attach K2 control frame with handle to L42 frames and blades, secure with Z02A screws as shown.
Repeat these steps to assemble a total of 2 louvered windows.

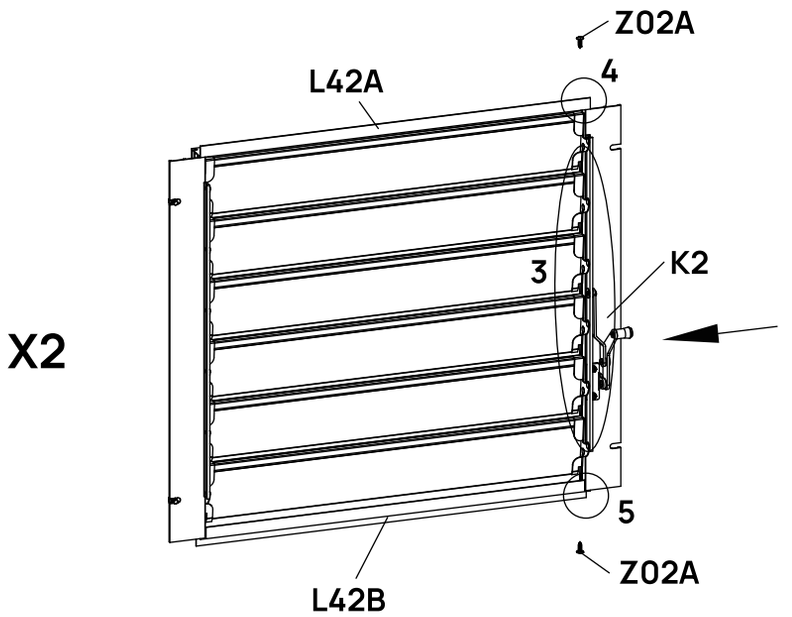

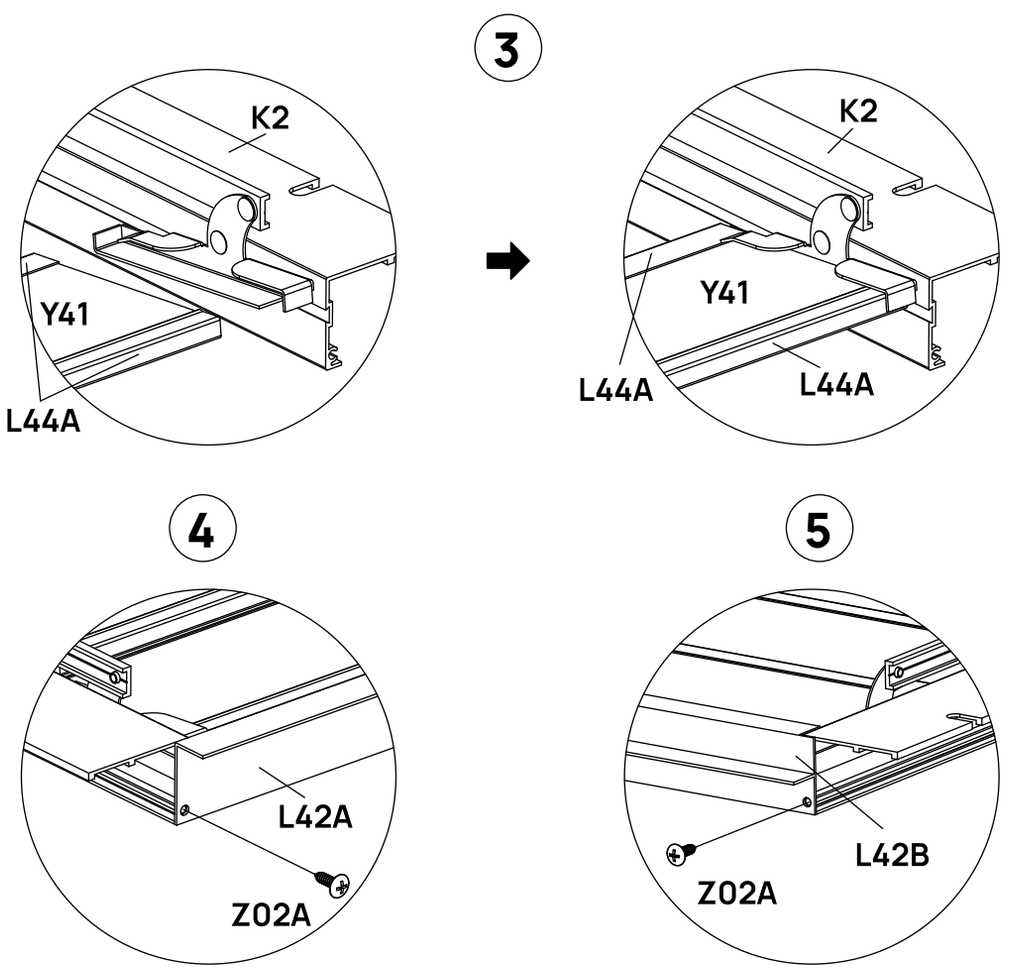

STEP

05

Attach the 2 sets of louvered windows as shown, using S94 T-bolts and M24 nuts.

BOX	PART	NO	QTY
		C2	2
PCBOX-1		S94 M6X10	8
PCBOX-1		M24 M6	8

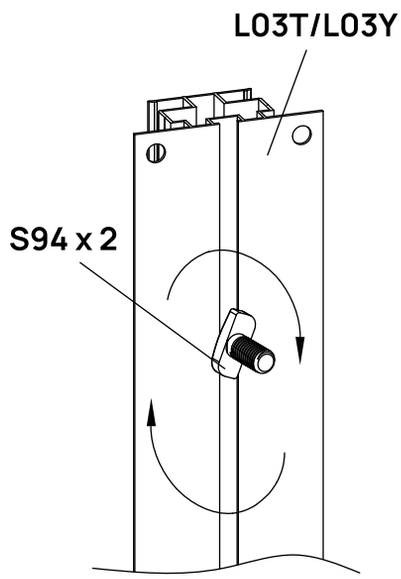

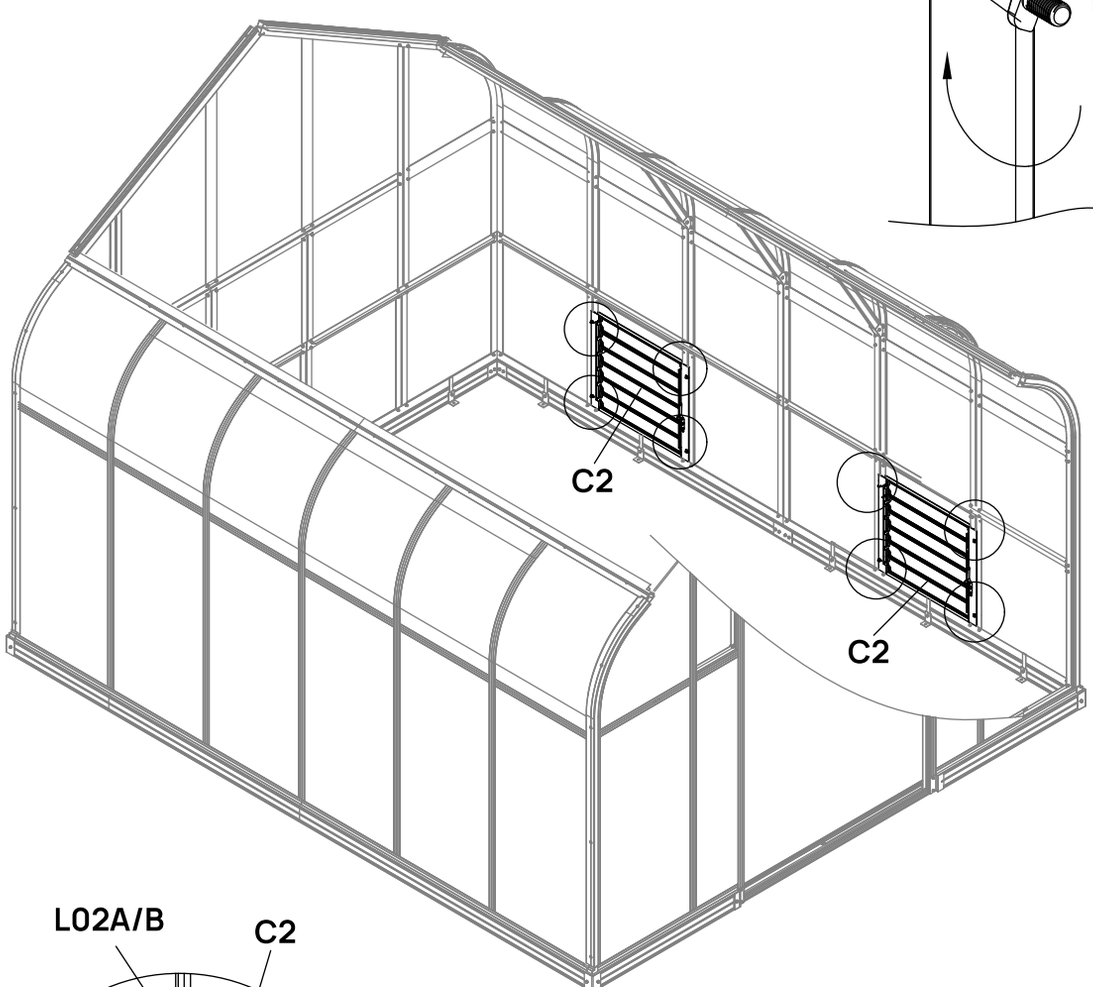

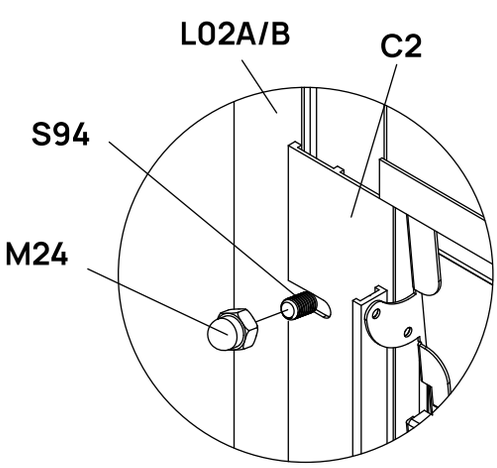

Test to make sure the louver blades can be opened and closed smoothly with the handle.

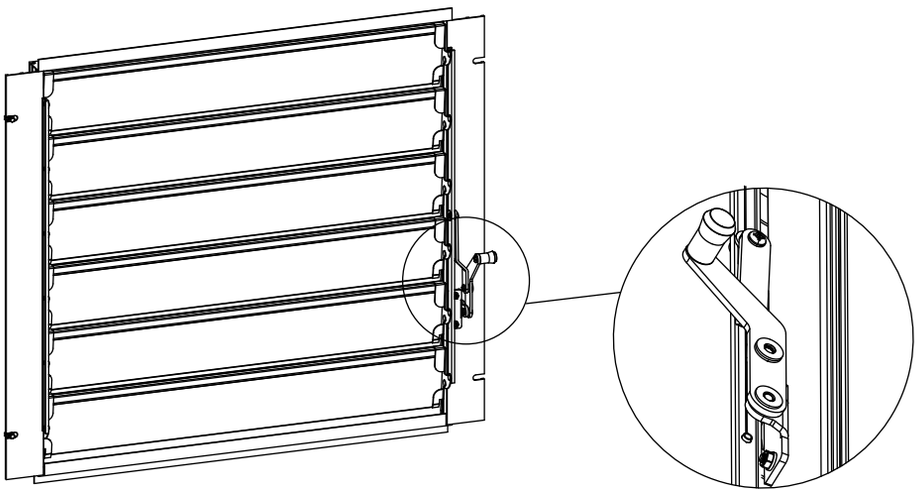

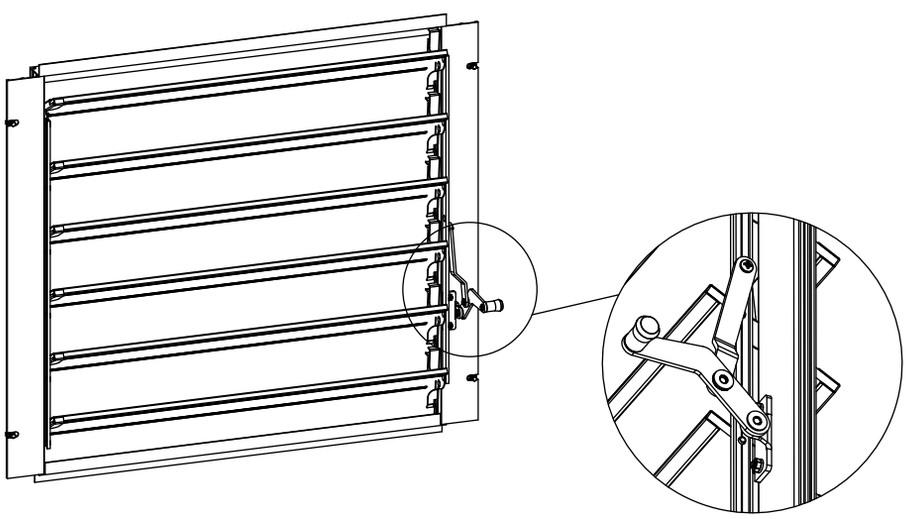

vegogarden.com

Roof Assembly

STEP
01

Assemble roof rafter pieces with D348 brackets, then attach support bars to the rafters as shown.

BOX	PART	NO	QTY
ALBOX-3		L02E	2
ALBOX-4		L05F	1
ALBOX-4		D348	2
ALBOX-1		D467	2
ALBOX-4		S03A M6X10	24
ALBOX-4		M24 M6	24
Pre-installed		S01A M6X12	4

1

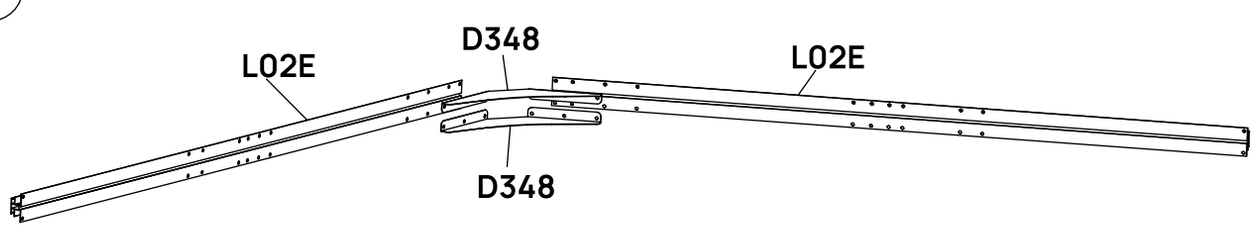

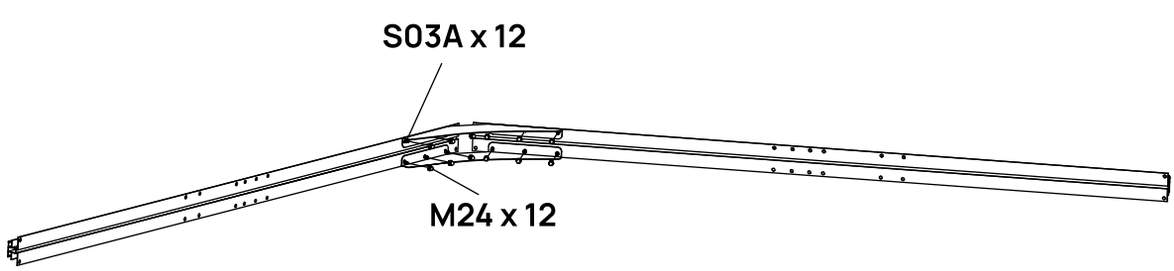

2

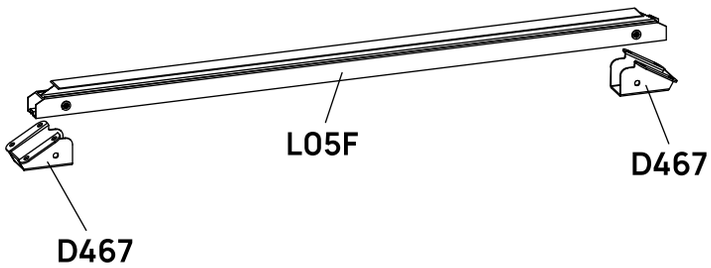
L05F
D467
D467

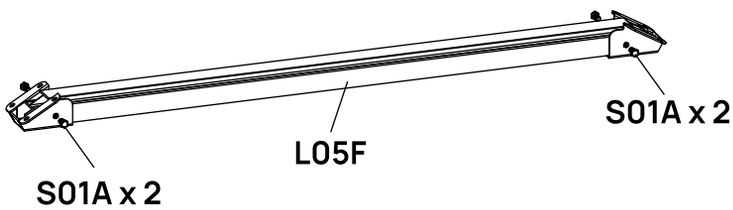
S01A x 2
L05F
S01A x 2

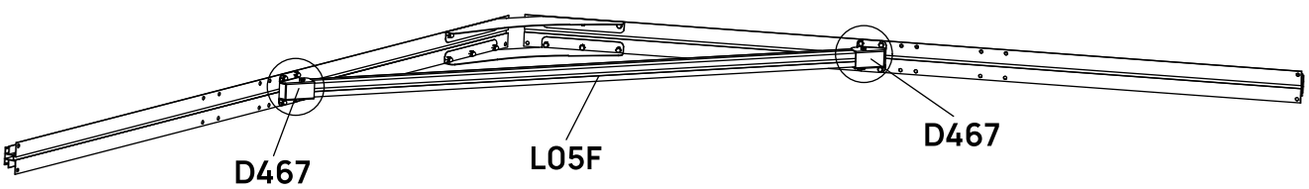
D467
L05F
D467

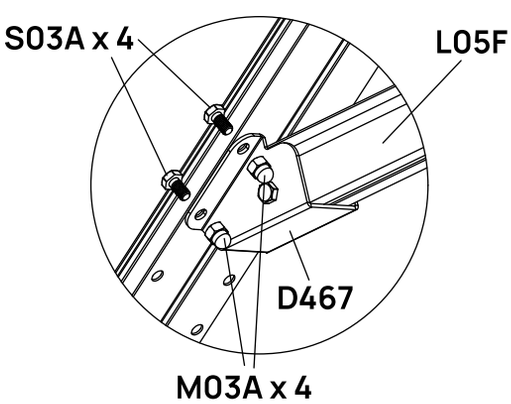
S03A x 4
L05F
D467
M03A x 4

STEP

02

Attach the roof rafters to the eave frames as shown.

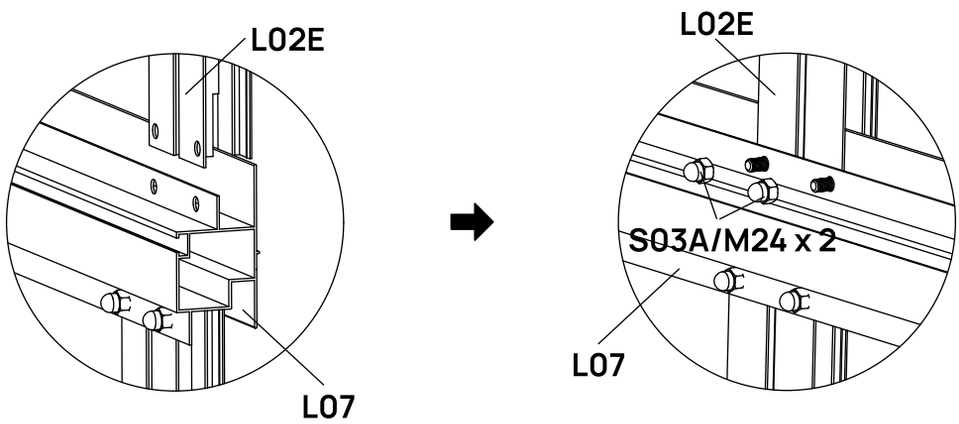

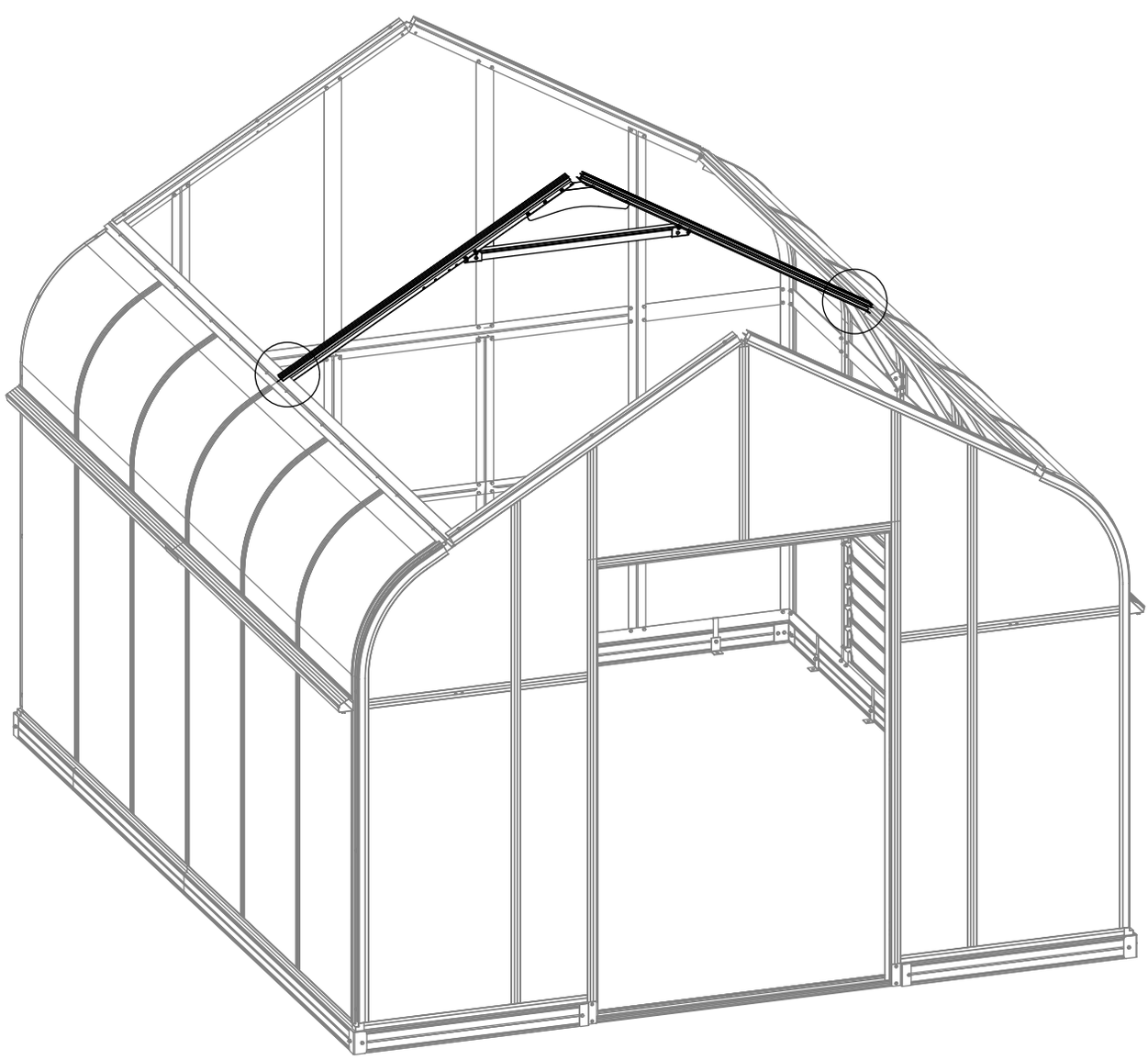

STEP

03

Assemble ridge frames on the roof rafters as shown.

BOX	PART	NO	QTY
ALBOX-2		L05B	4
ALBOX-2		L06B	2
ALBOX-4		D26	1
ALBOX-4		S03A M6X10	24
ALBOX-4		M24 M6	24
ALBOX-4		Z08A M4.2X16	2

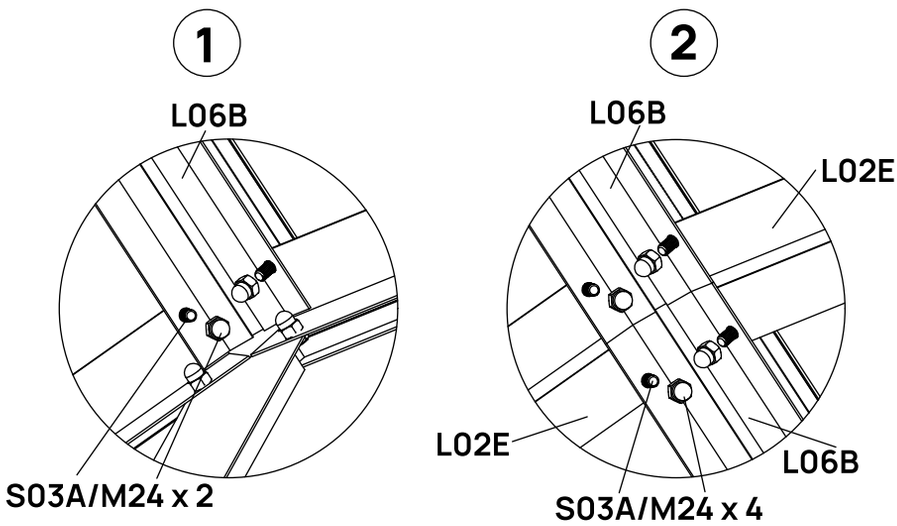

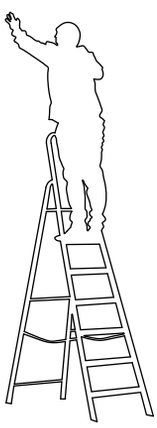

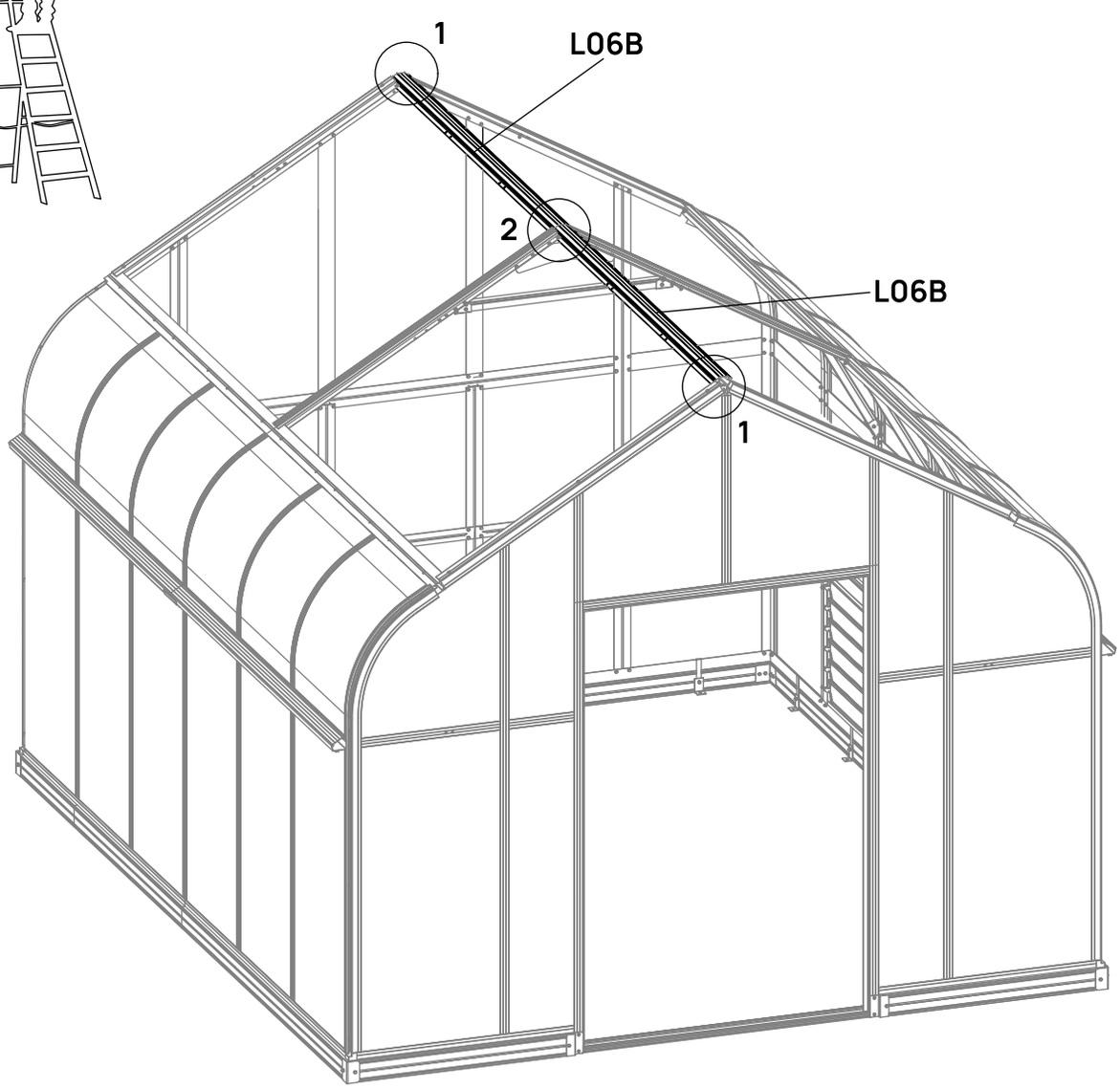

STEP

04

Secure the D26 ridge cap with Z08A screws to reinforce the ridge structure.

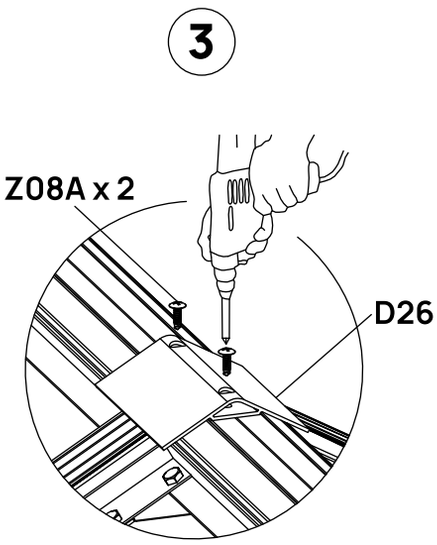

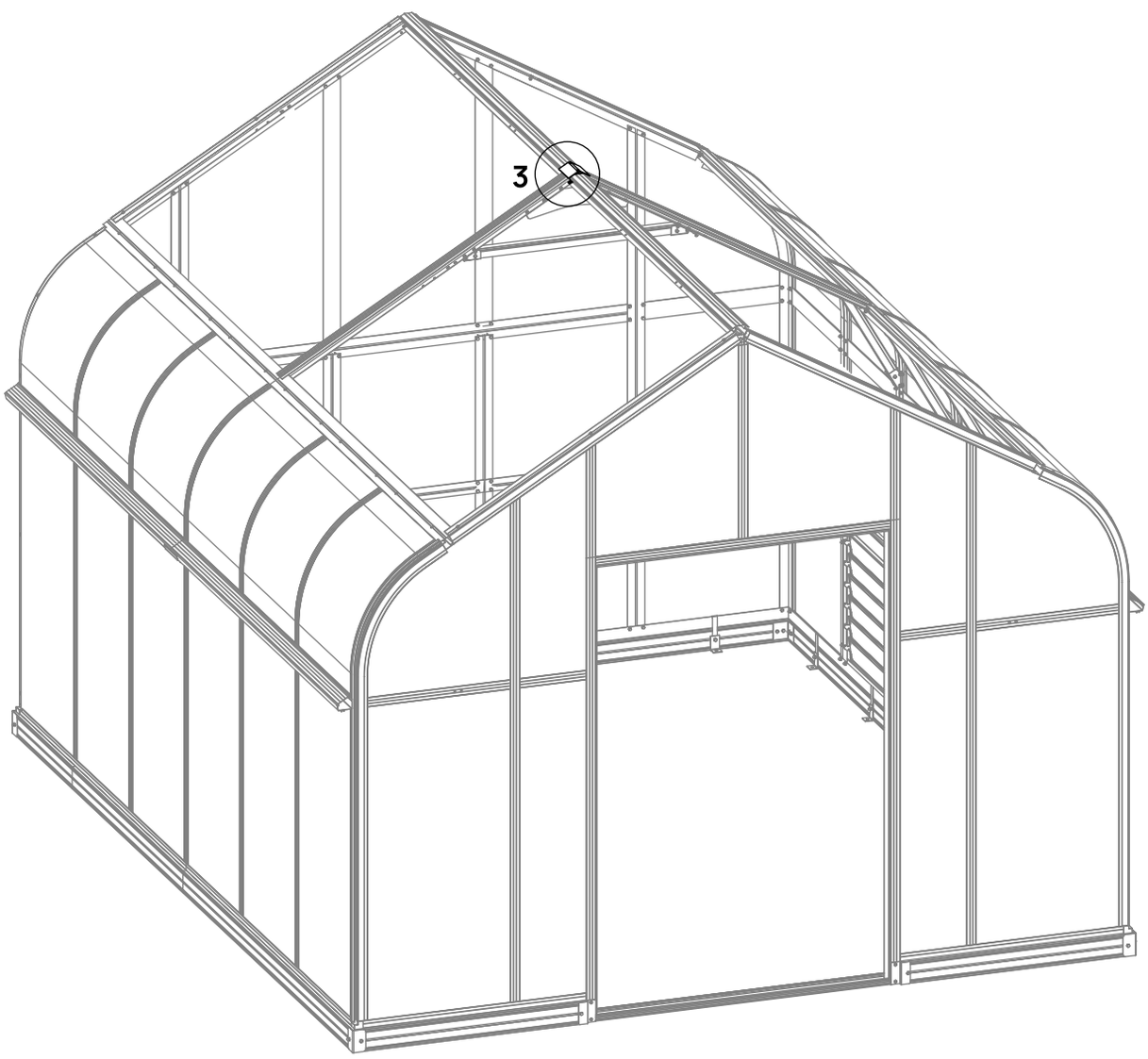

STEP

05

Assemble L05 roof connecting frames as shown.

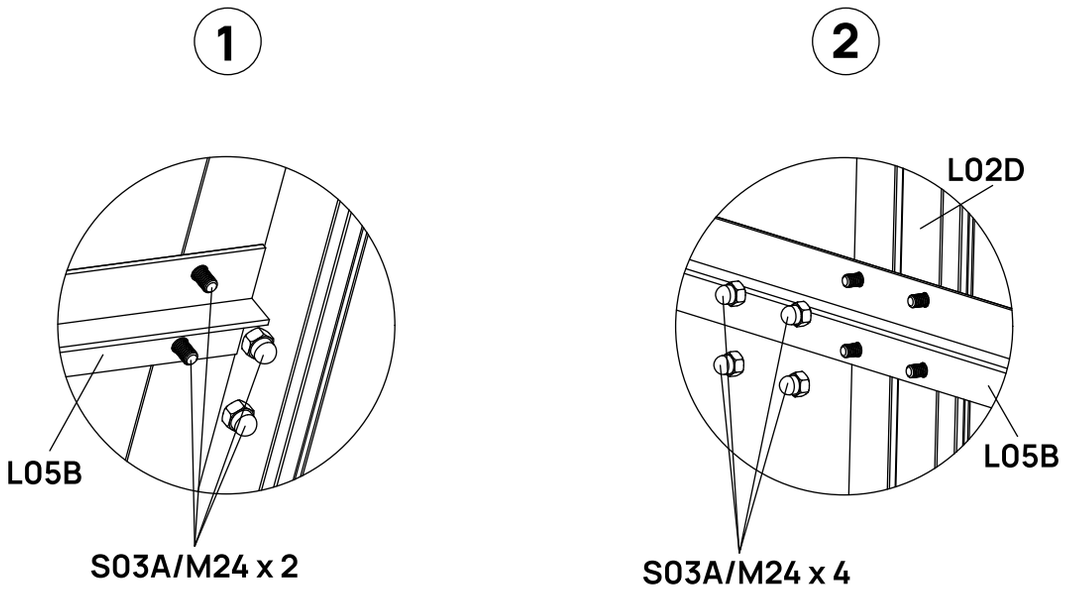

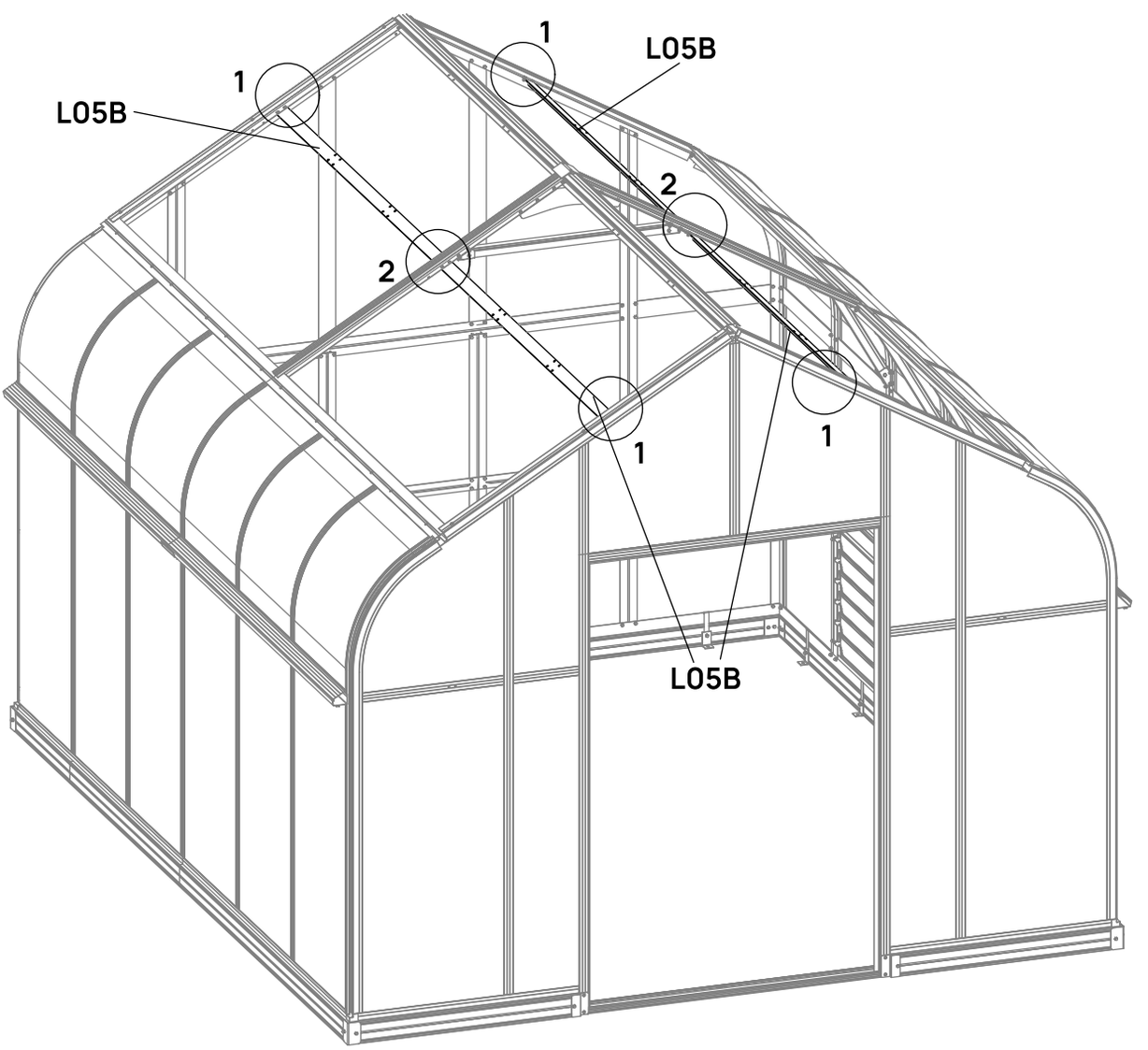

STEP

06

Assemble the rest of L02C and L02D roof rafters as shown.

BOX	PART	NO	QTY
ALBOX-3		L02C	4
ALBOX-3		L02D	4
ALBOX-4		S03A M6X10	64
ALBOX-4		M24 M6	64

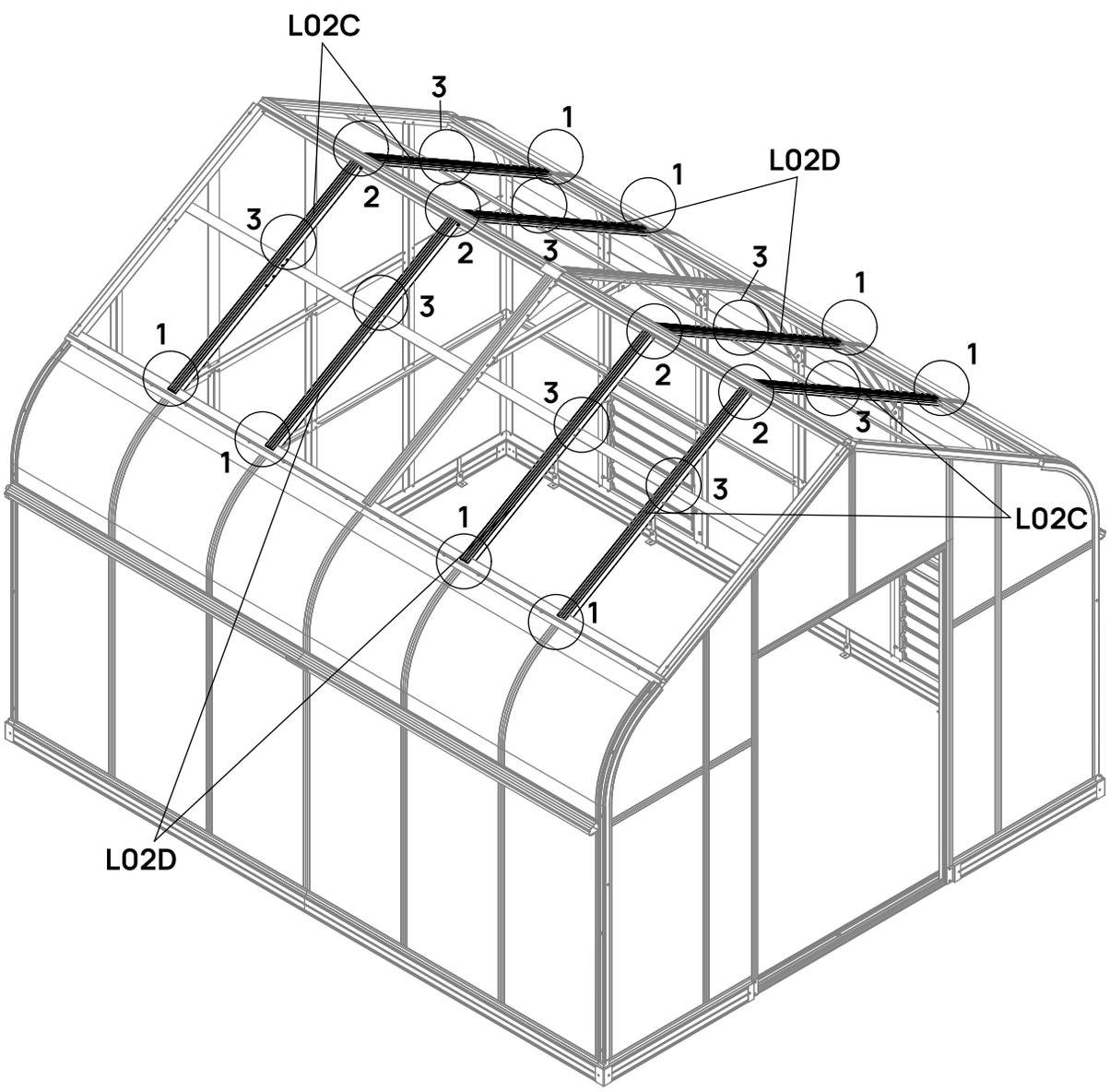

1

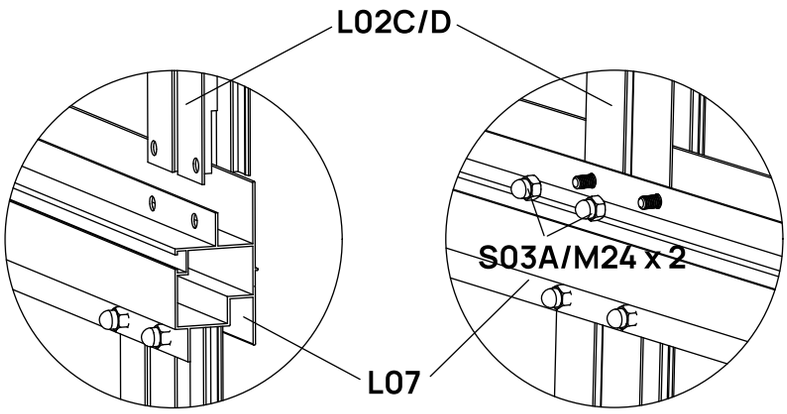

2

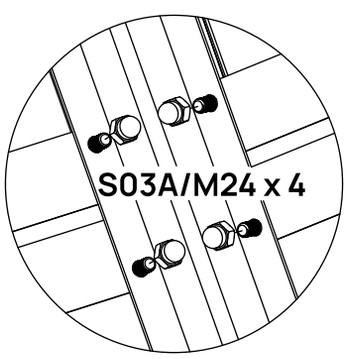

3

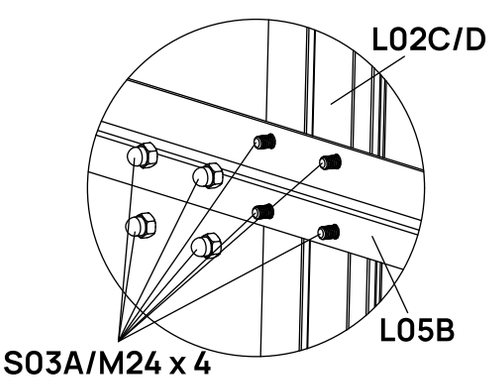

STEP

07

Assemble the rest of support bars, then attach them to the rafters as shown.

BOX	PART	NO	QTY
ALBOX-4		L05F	2
ALBOX-1		D467	4
Pre-installed		S01A M6X12	8
ALBOX-4		S03A M6X10	16
ALBOX-4		M24 M6	16

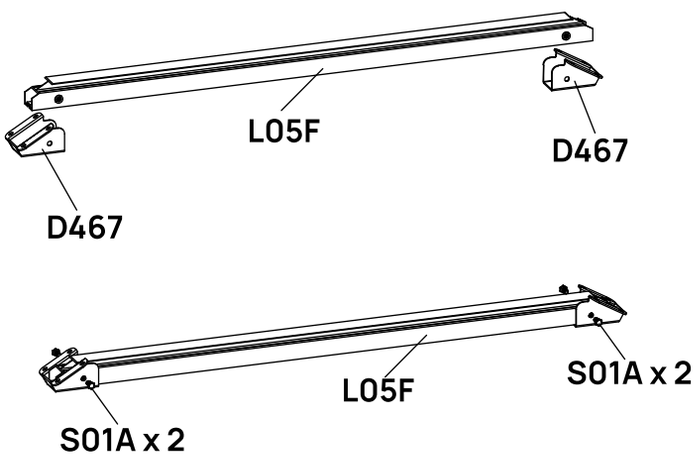

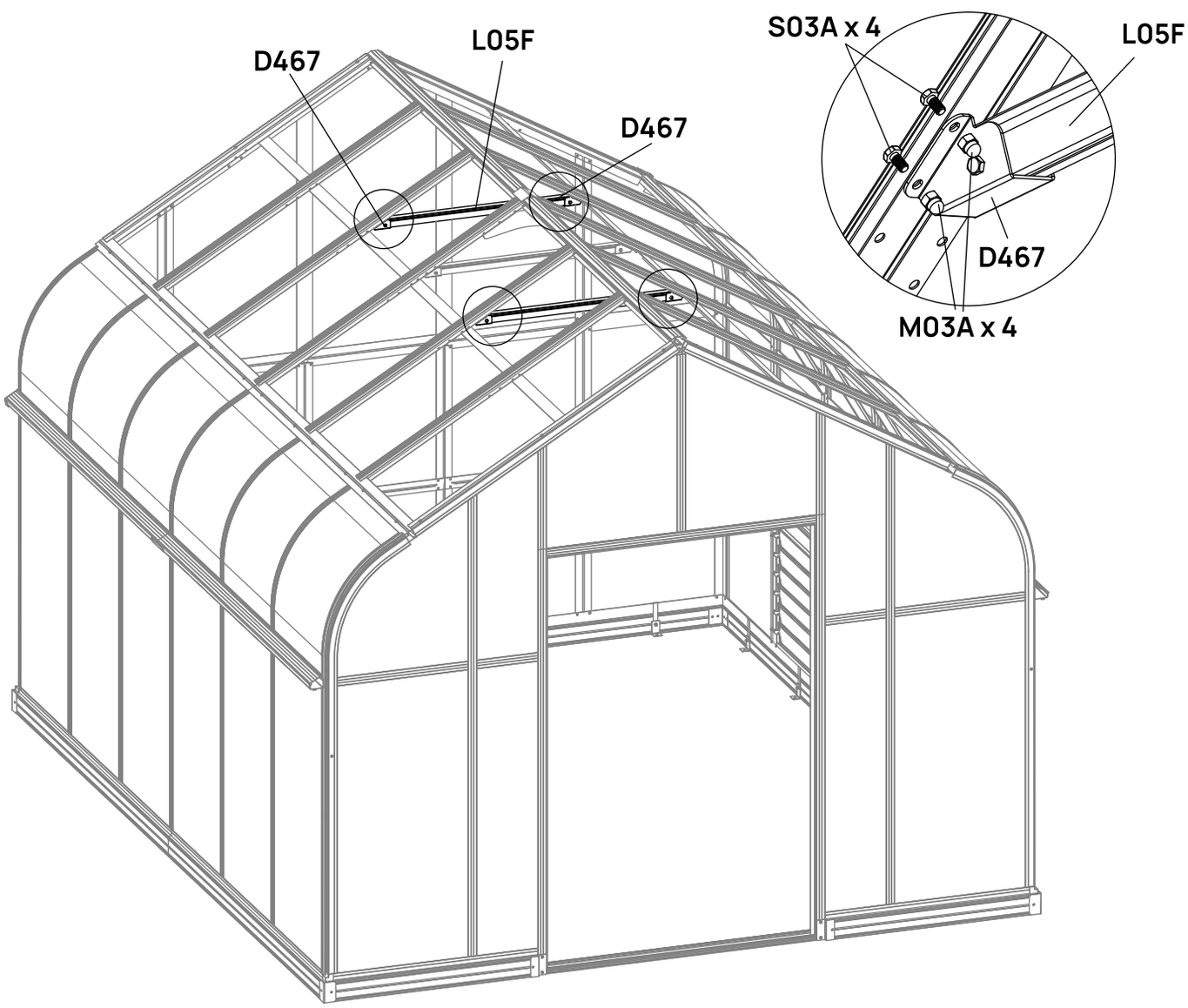

Vent Assembly

STEP
01

With the UV-Protected side of the PC panel facing downward, assemble the vent as shown, using Z02A screws. Make sure the profiles with weather stripping are positioned on the same side, trim any excess stripping from the ends.

BOX	PART	NO	QTY
ALBOX-4		L11A	6
ALBOX-4		L19	12
ALBOX-4		L20	6
ALBOX-4		L21	6
PCBOX-1		Y10	6
ALBOX-4		Z02A Ø4X16D	60
PCBOX-2		H158	1

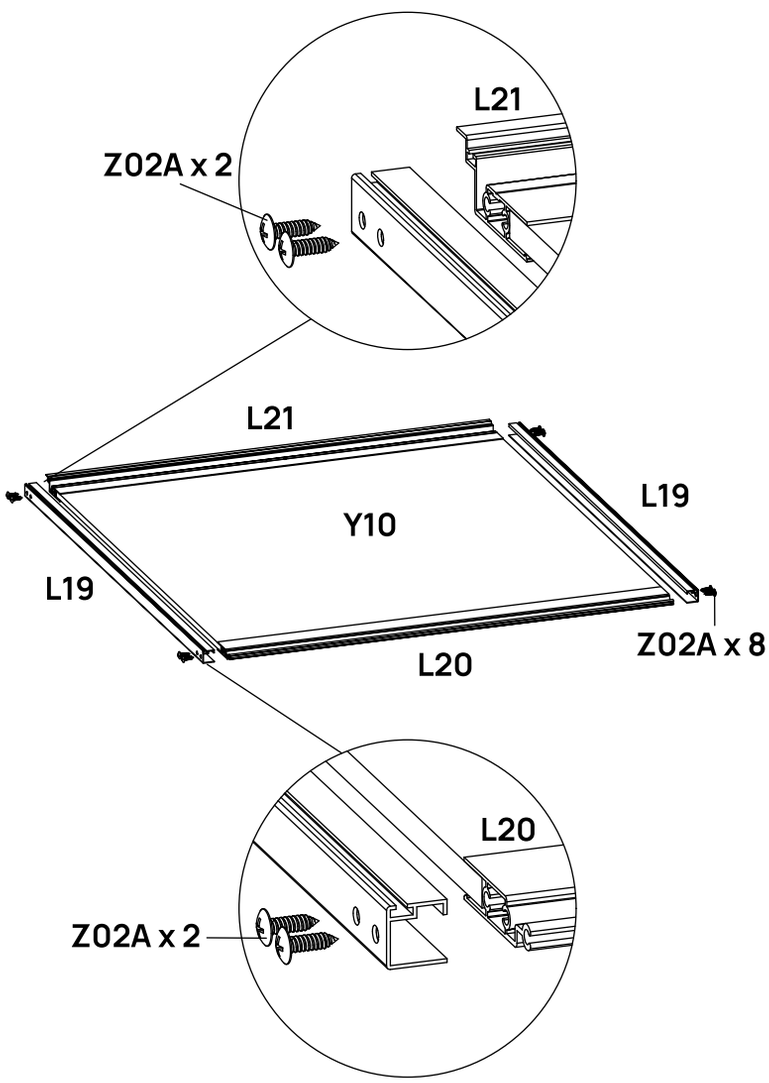

Slide L11A hinge frame onto L20 as shown. Ensure it is oriented the correct way, then secure with Z02A screws as shown.

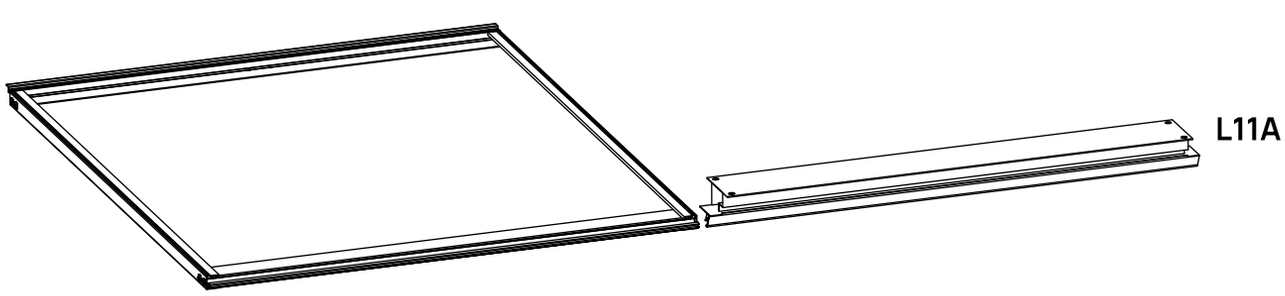

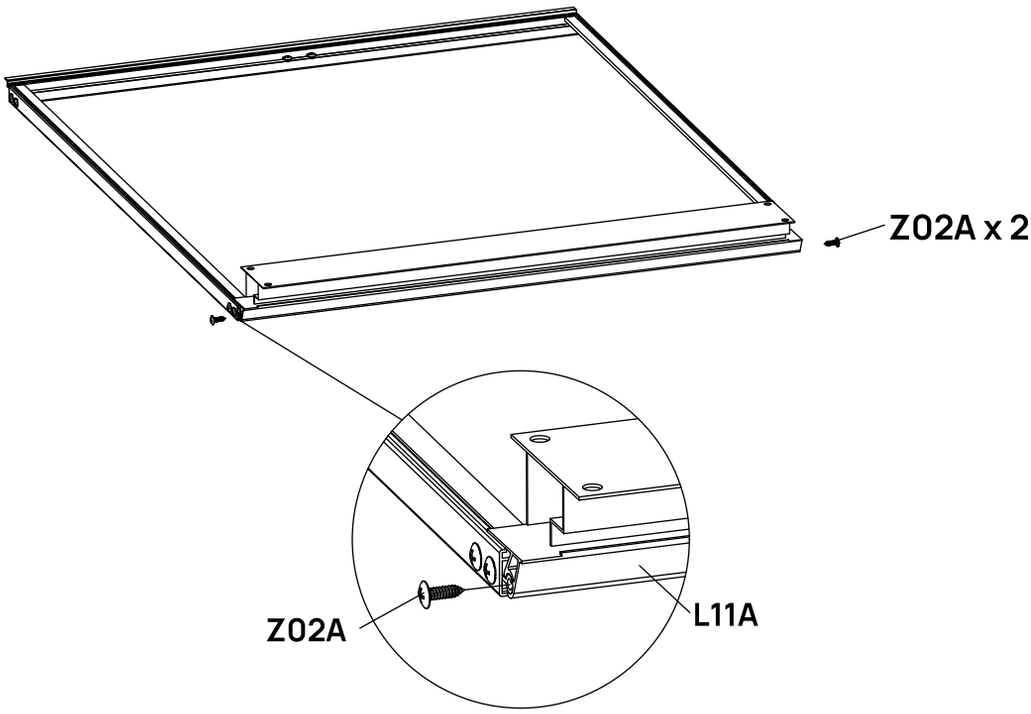

Repeat these steps to assemble a total of 6 vents.

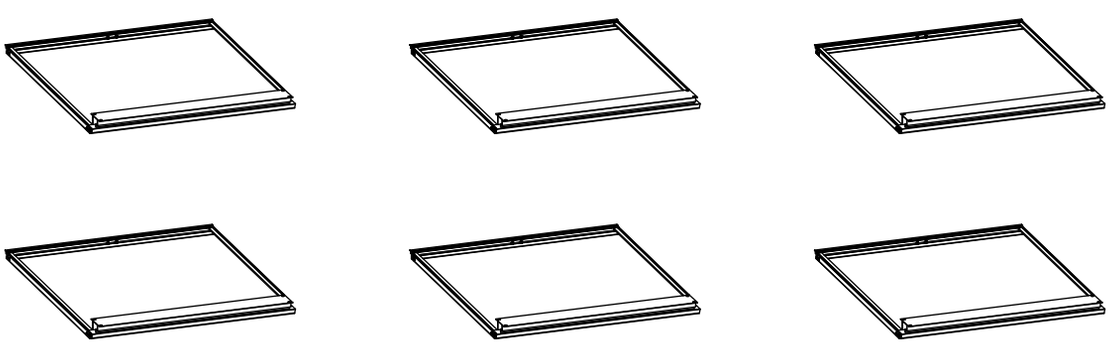

C1 X 6

STEP

02

Apply silicone caulk (not provided) or H231 butyl tape around all PC panels to seal.

BOX	PART	NO	QTY
PCBOX-2		H231	1

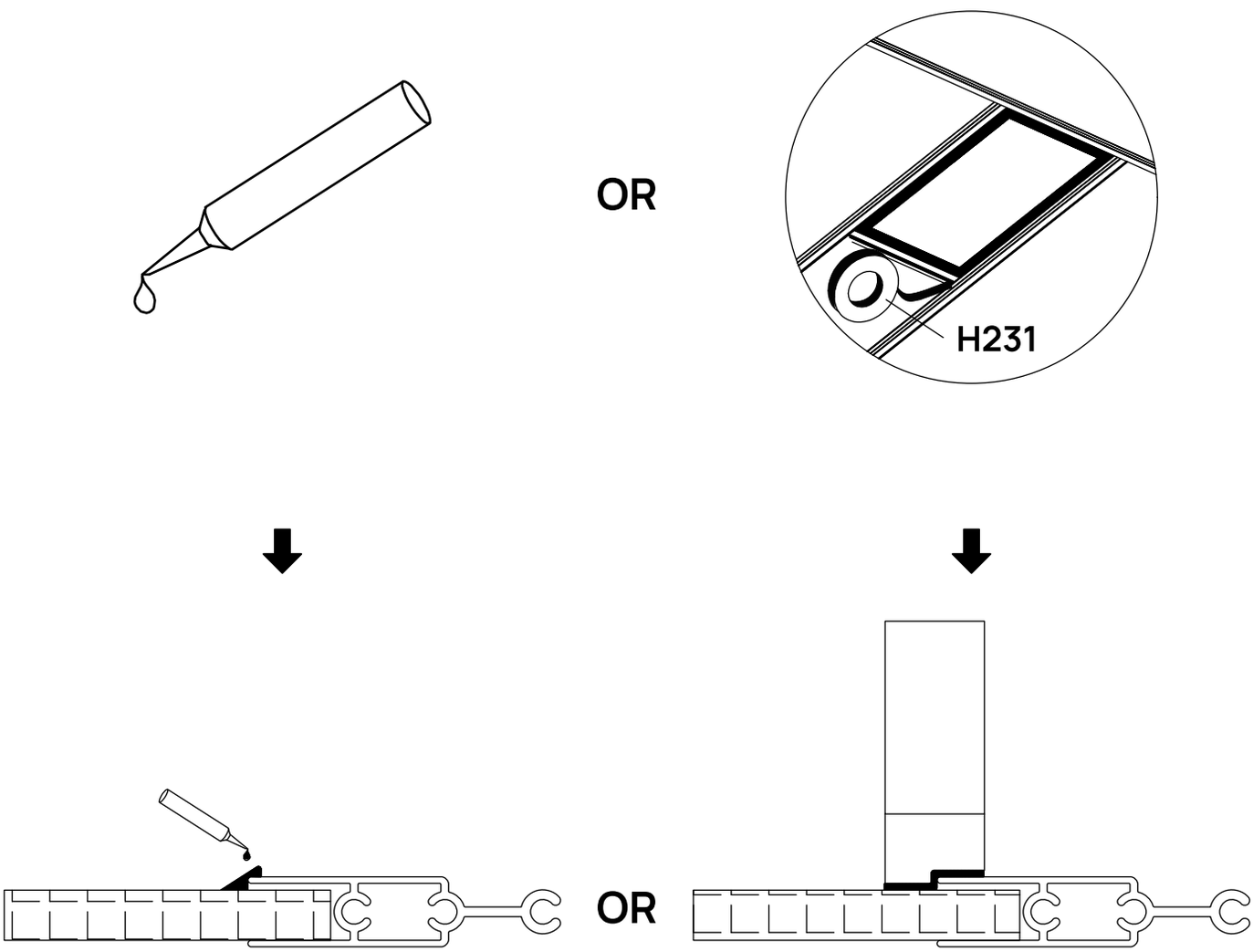

STEP

03

Slide Y7 and Y9 panels into place as shown.

BOX	PART	NO	QTY
PCBOX-1		Y9	2
PCBOX-1		Y7	2
PCBOX-2		H158	1
PCBOX-2		H231	1

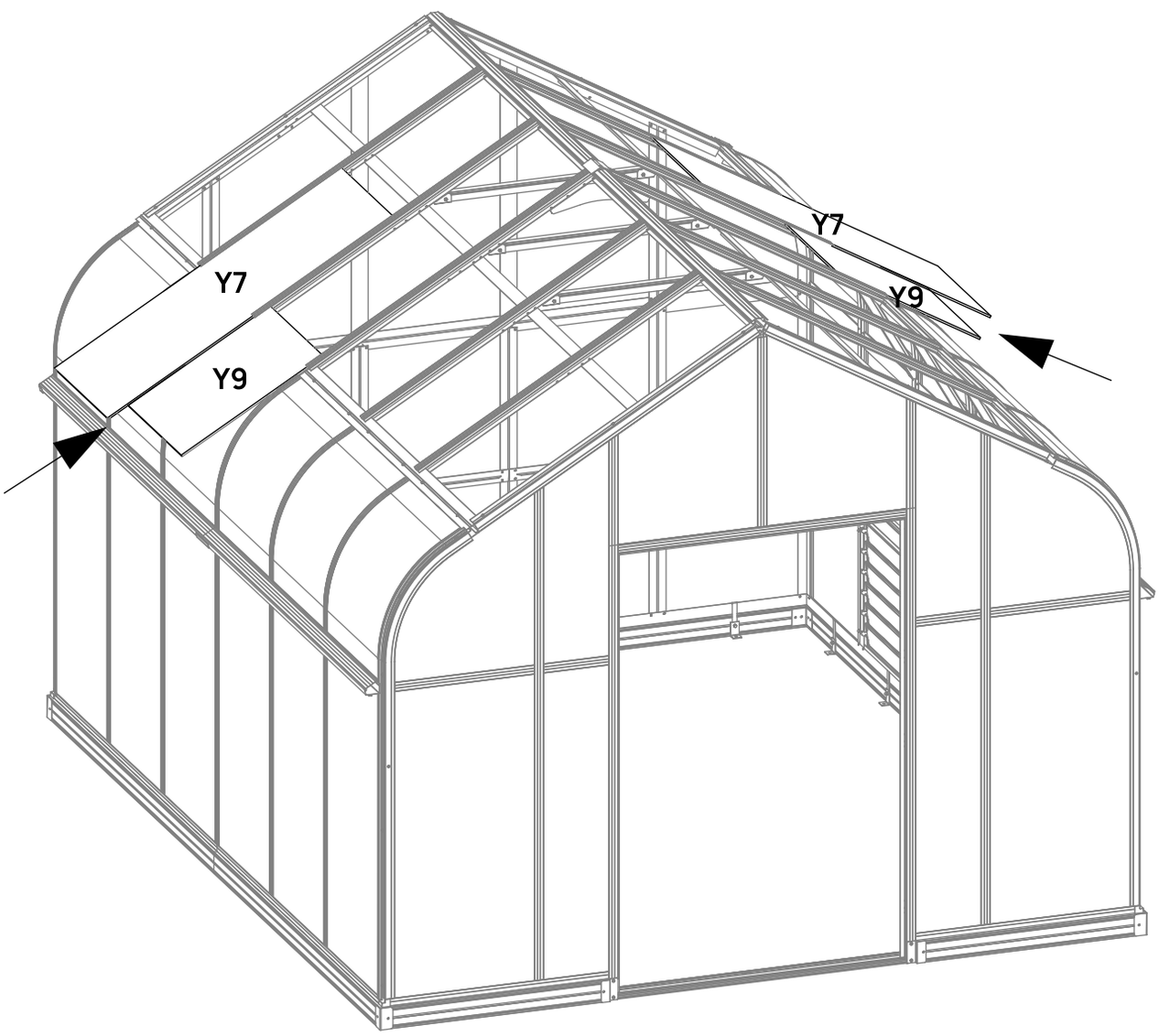

STEP

04

Attach vents to the roof as shown in diagram.

BOX	PART	NO	QTY
		C1	2
ALBOX-4		S03A M6X10	8
ALBOX-4		M24 M6	8
PCBOX-2		H231	1

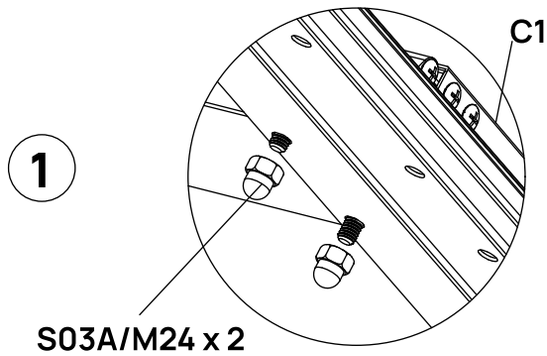

Note: Gently slide the vent along the rafters at a slight angle, aligning the groove on the vent frame with the ridge on the rafter frame. Once aligned, adjust the vent to the correct position and secure it in place.

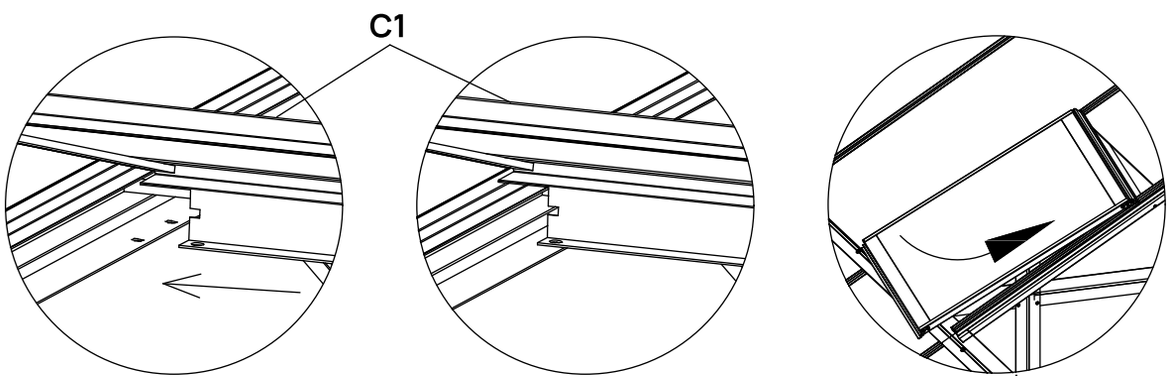

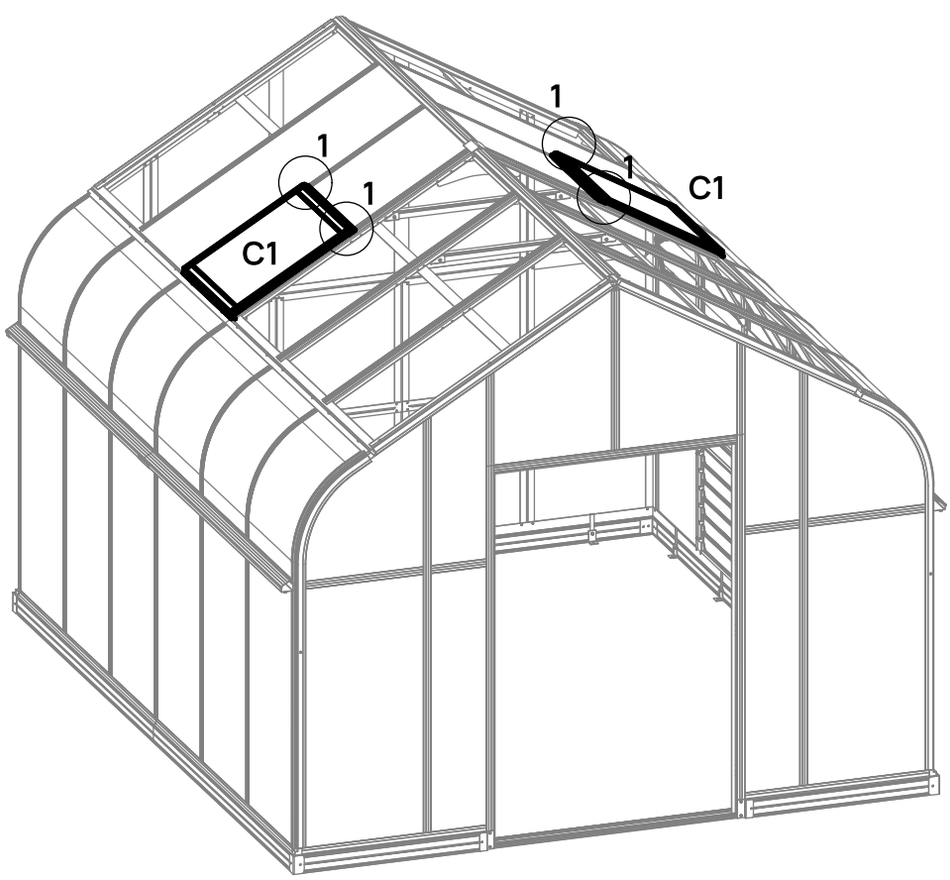

Apply silicone caulk (not provided) or H231 butyl tape around all roof PC panels to seal.

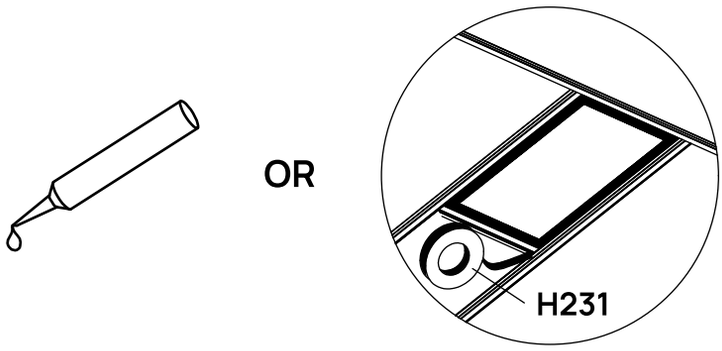

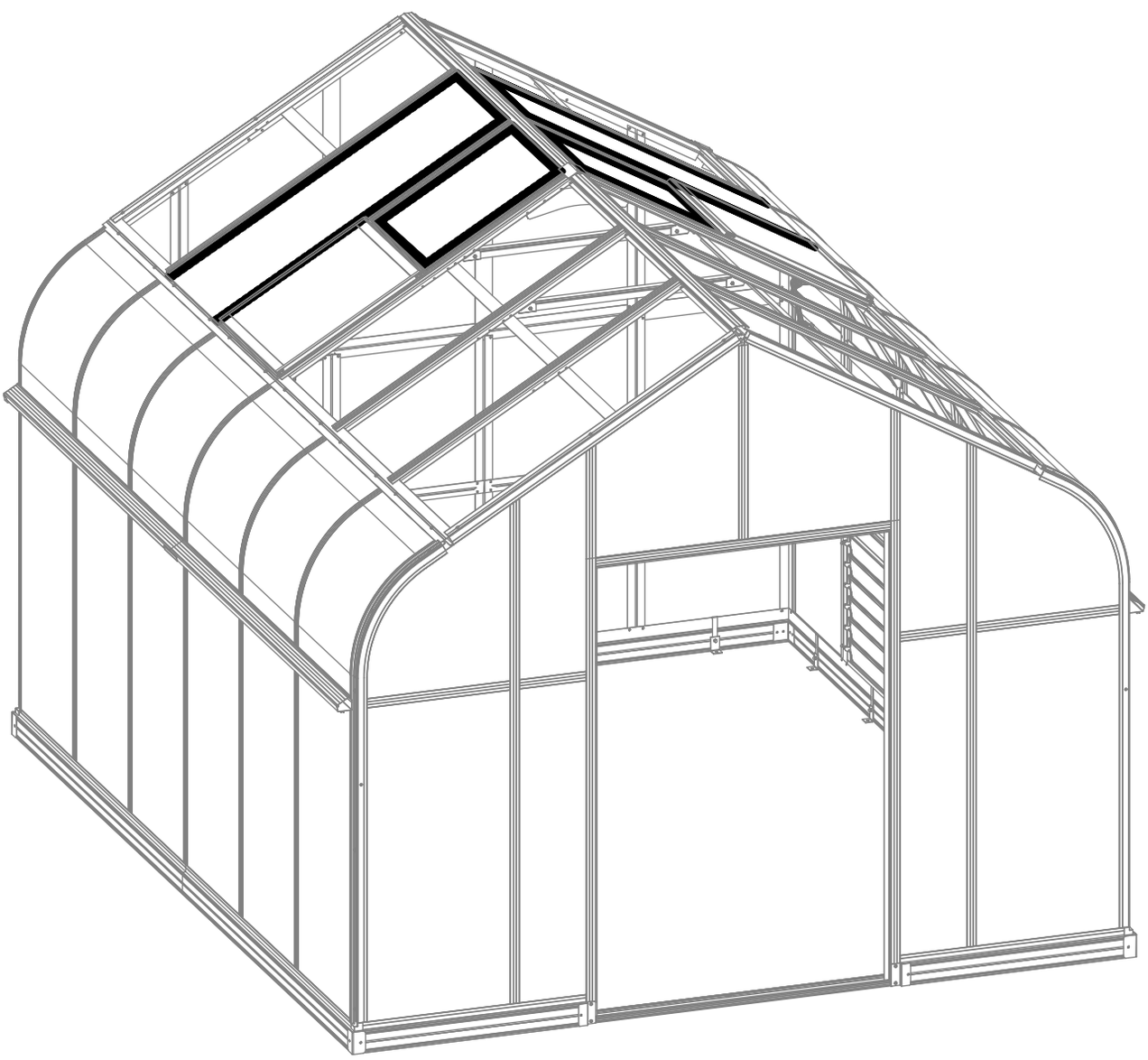

STEP

05

Repeat the last three steps to install the rest of panels and vents a shown.
Apply silicone caulk (not provided) or H231 butyl tape around all roof PC panels to seal.

BOX	PART	NO	QTY
PCBOX-1		Y7	4
PCBOX-1		Y9	4
		C1	2
ALBOX-4		S03A M6X10	8
ALBOX-4		M24 M6	8
PCBOX-2		H158	1
PCBOX-2		H231	1

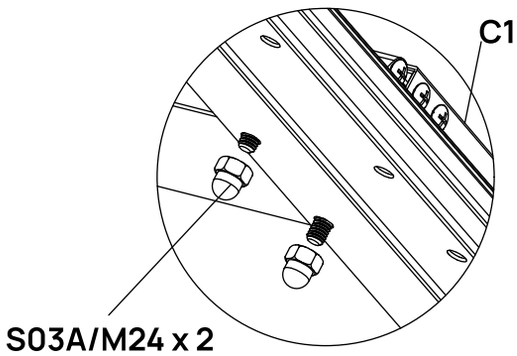

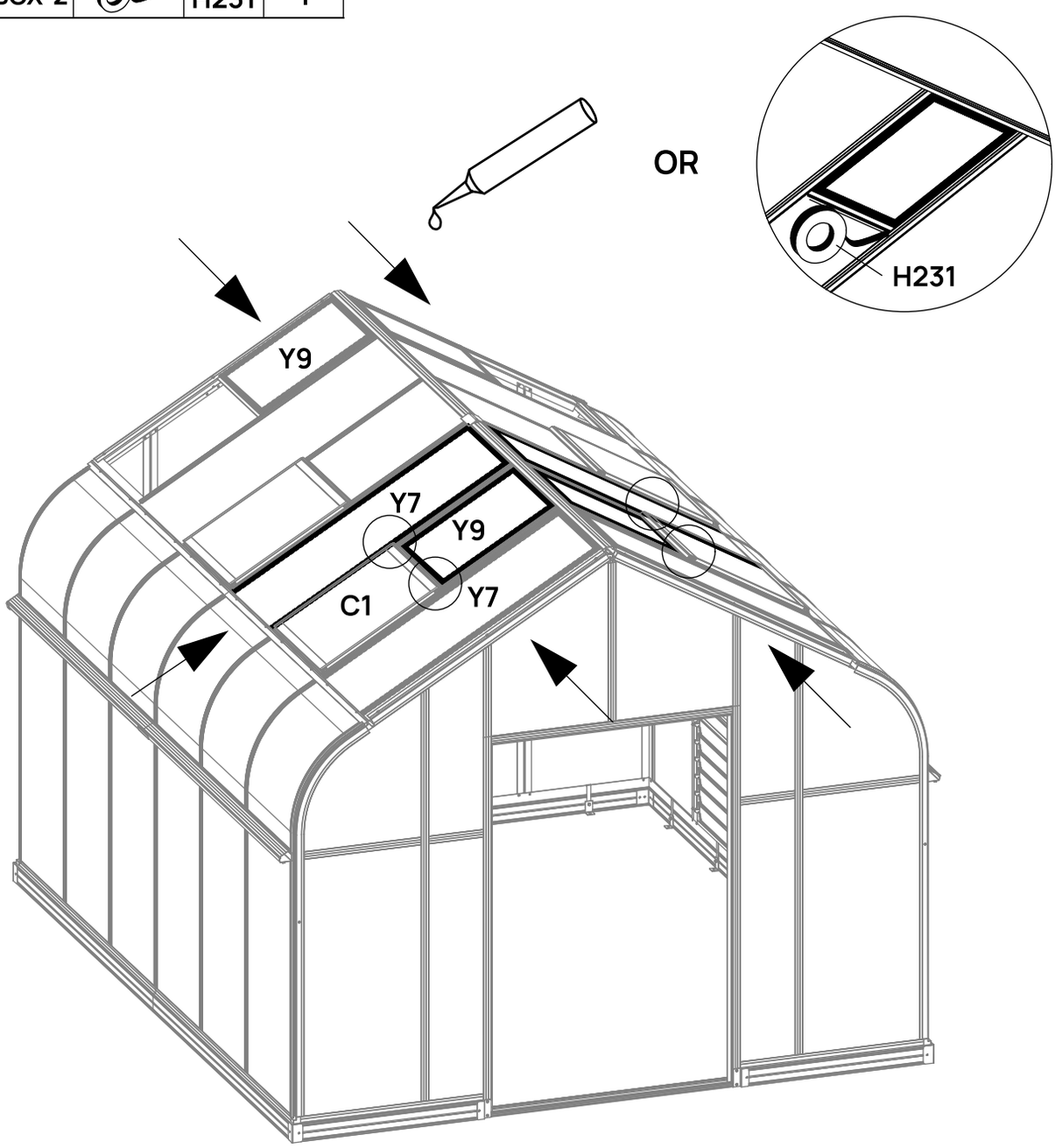

STEP

06

Remove the pre-installed S26A from eave frames.
Attach L29A/B cover frames onto eave frames to secure the roof panels as shown, using the removed S26A bolts.

BOX	PART	NO	QTY
ALBOX-2		L29B	4
Pre-installed		S26A M5X12	24

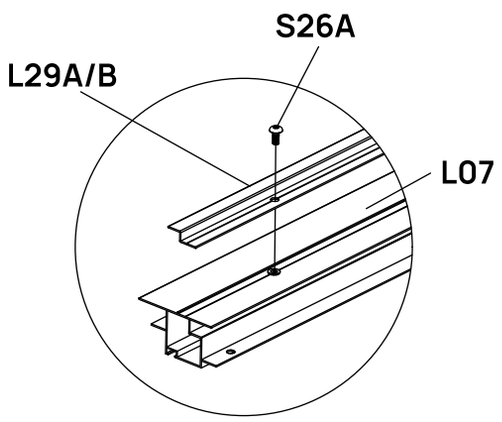

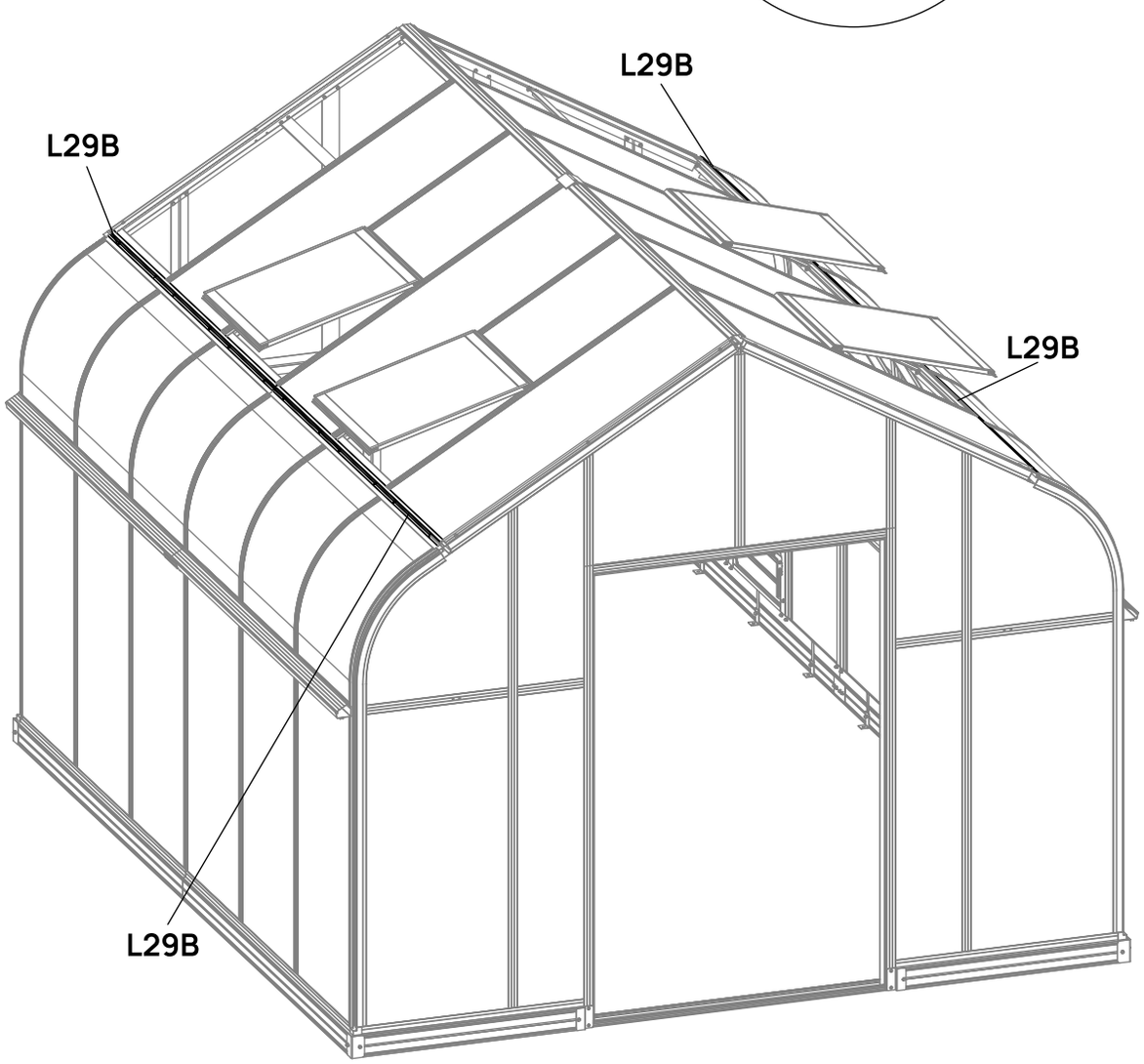

STEP

07

Remove the pre-installed S21A bolts from the front and back gable frames. Attach L12C cover frames onto L01 gable frames to secure the outermost PC panels as shown, using the removed S21A bolts.

BOX	PART	NO	QTY
ALBOX-3		L12C	4
Pre-installed		S21A M6X10	12

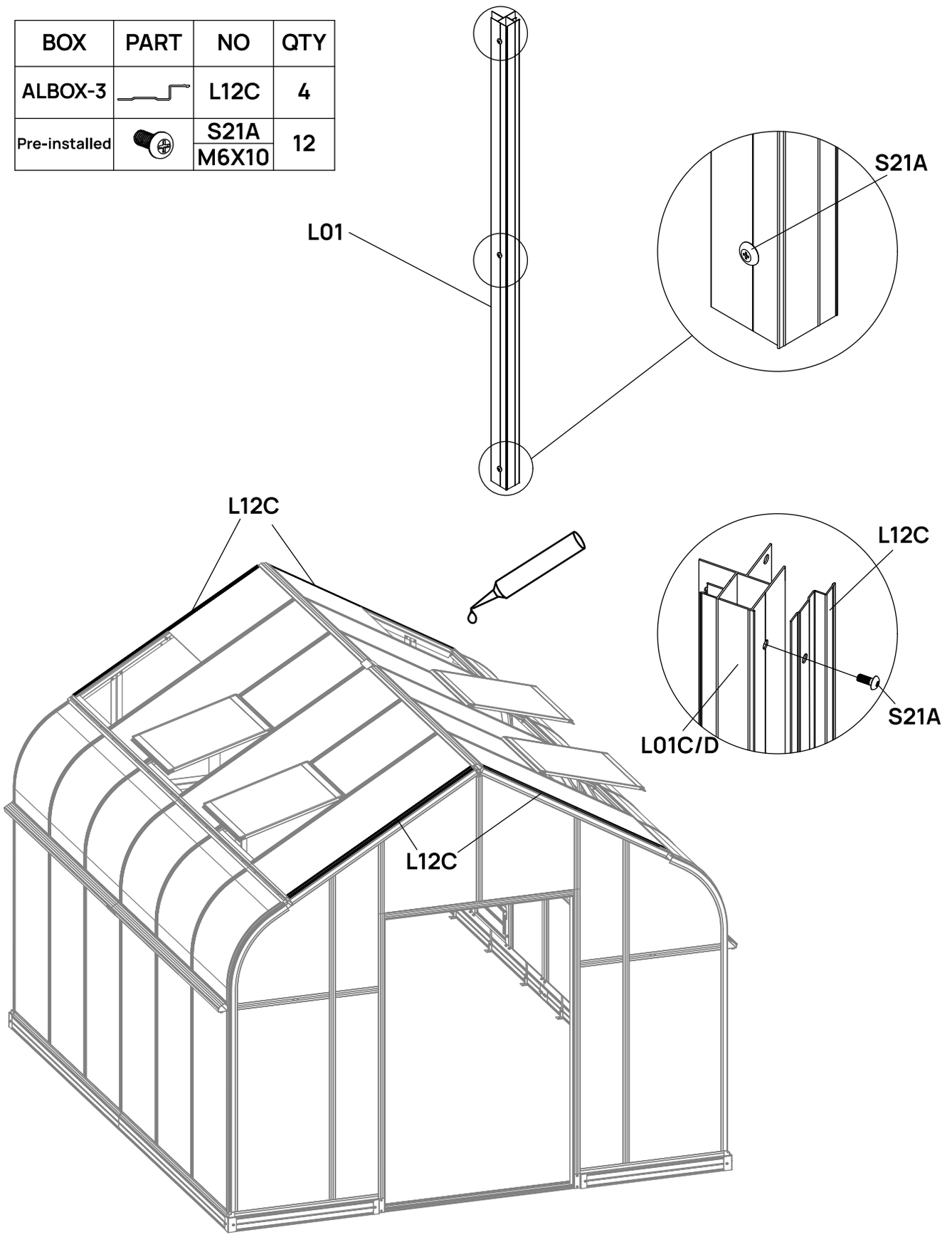

STEP

08

Attach the last vents on the roof, then install the manual vent openers as shown.

BOX	PART	NO	QTY
		C1	2
ALBOX-1		A111	6
Pre-installed		S26A M5X12	12
ALBOX-4		S03A M6X10	8
ALBOX-4		M24 M6	8
ALBOX-4		Z19A M4.2X10	12

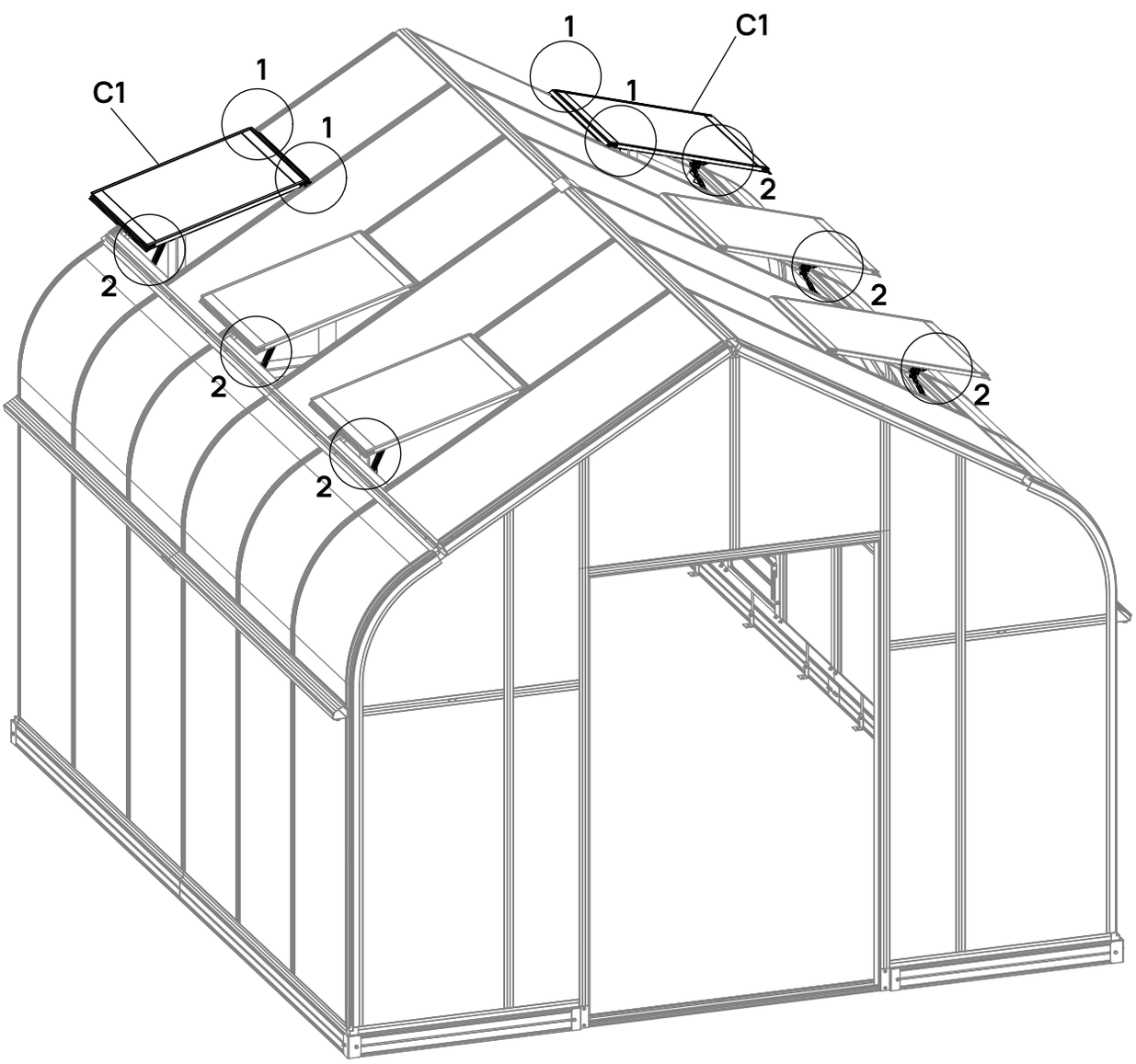

1

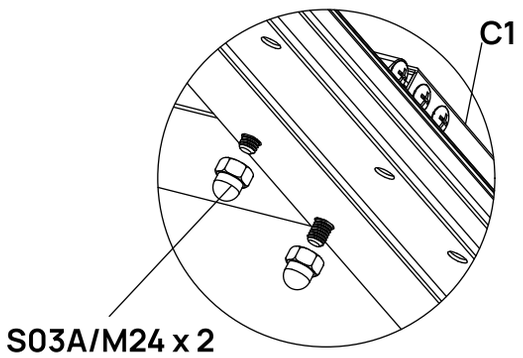

2

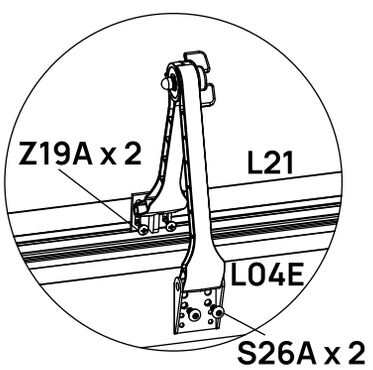

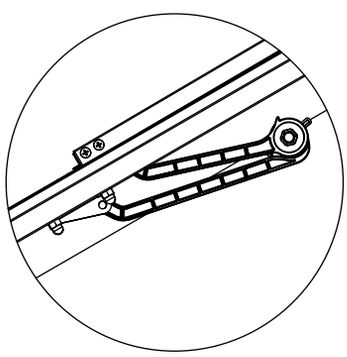

Auto Vent Opener Assembly

STEP
01

Assemble 2 sets of H244 Auto Vent openers as shown.

BOX	PART	NO	QTY
ALBOX-1		H244	2
Pre-installed		S26A M5X12	4
ALBOX-4		Z19A M4.2X10	4

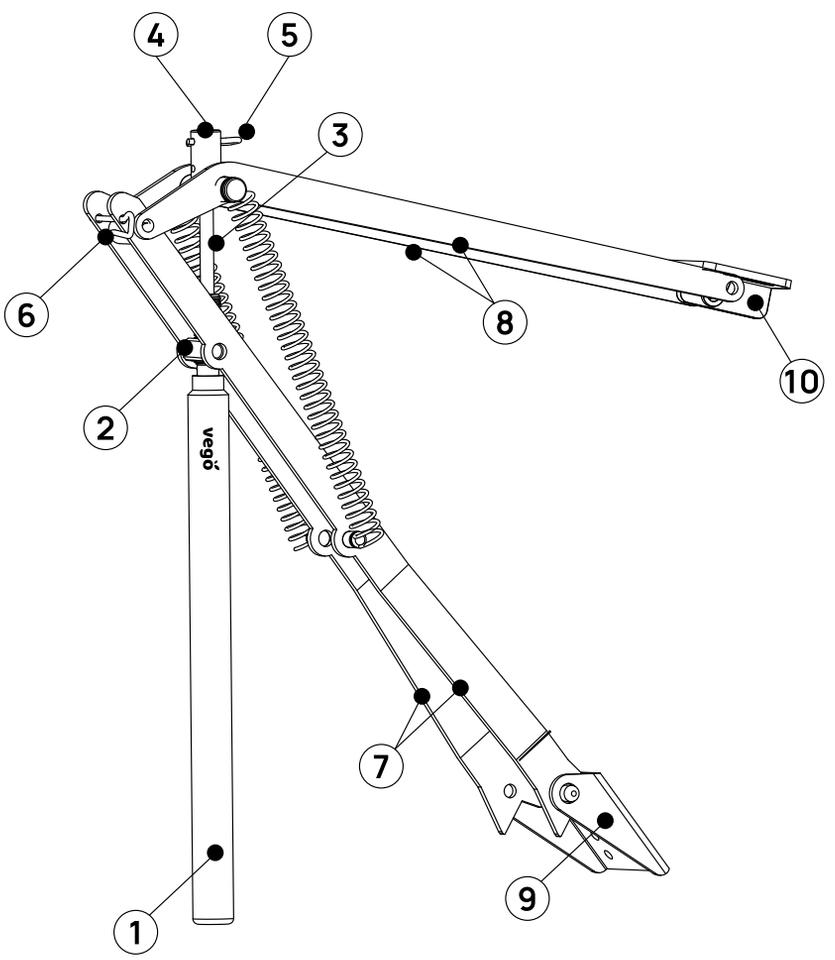

1. Cylinder
2. Cylinder Housing
3. Piston Rod
4. Clutch T
5. Hair Pin
6. Stop Pin
7. Arm B
8. Arm A
9. Frame Bracket
10. Vent Bracket

Thread the Cylinder through the Cylinder Housing so that the end of the Piston Rod enters the Clutch T.

Tips: For easy assembly, chill the cylinder at a temperature below 41°F for 15–20 minutes to reduce tension.

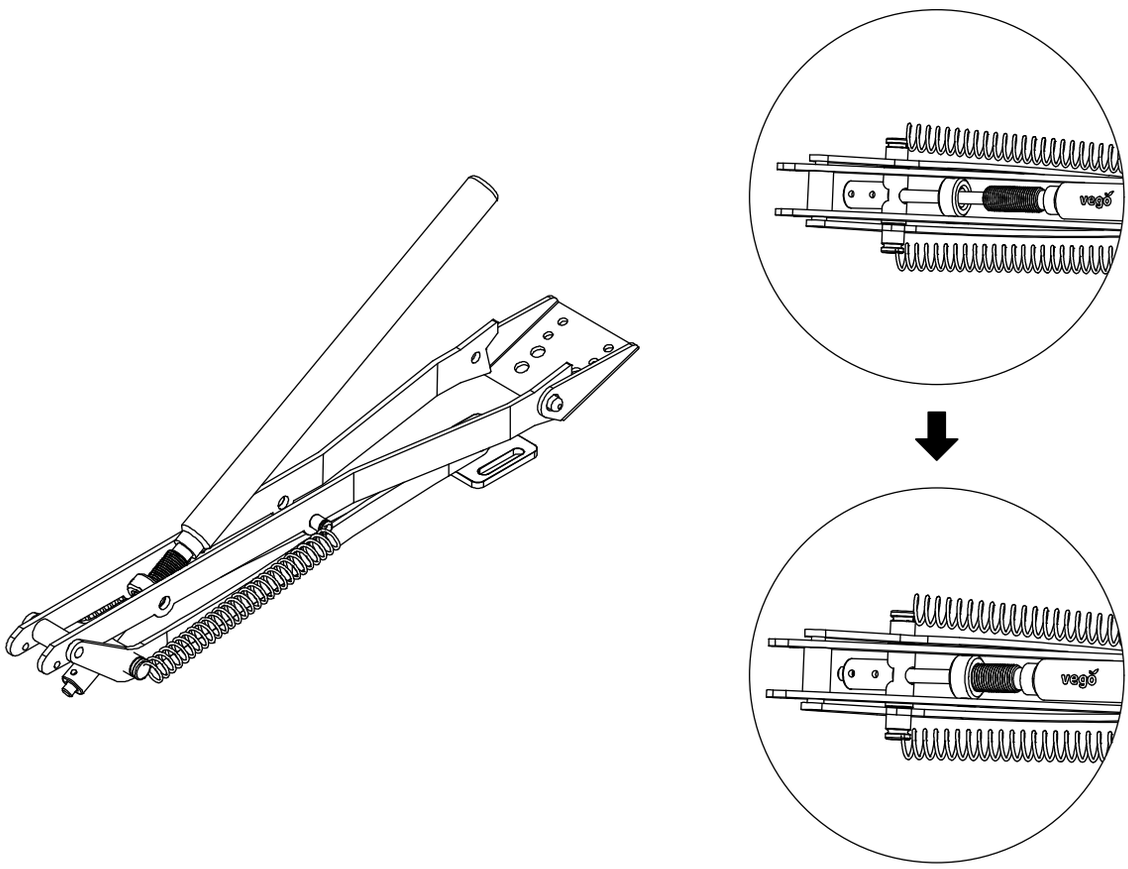

vegogarden.com

STEP

02

If the maximum vent opening measures more than 16.5 inches, place the Hair Pin into hole A.
If the maximum opening measures less than 16.5 inches, place the Hair Pin into hole B.
Insert the longer Stop Pin into the end of into the end of Arm B frame as shown in blue.
Note: Do not install Stop Pin until Hair Pin has been installed.

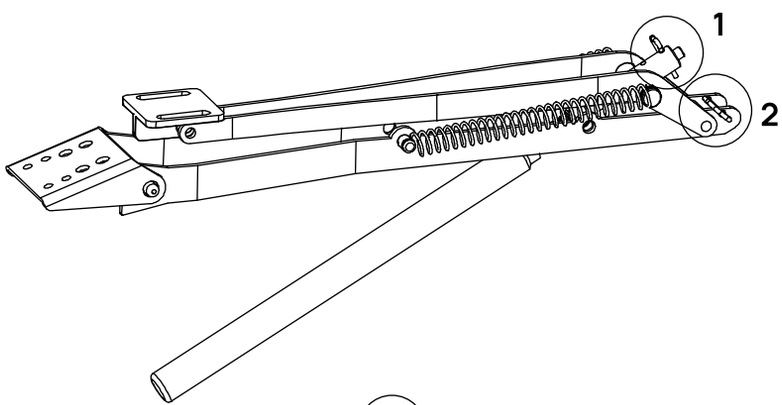

1

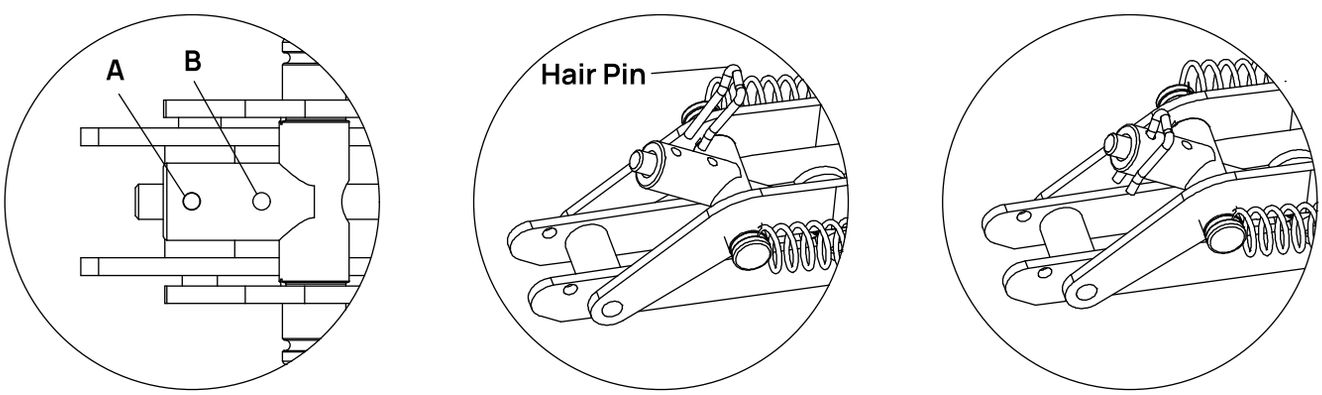

2

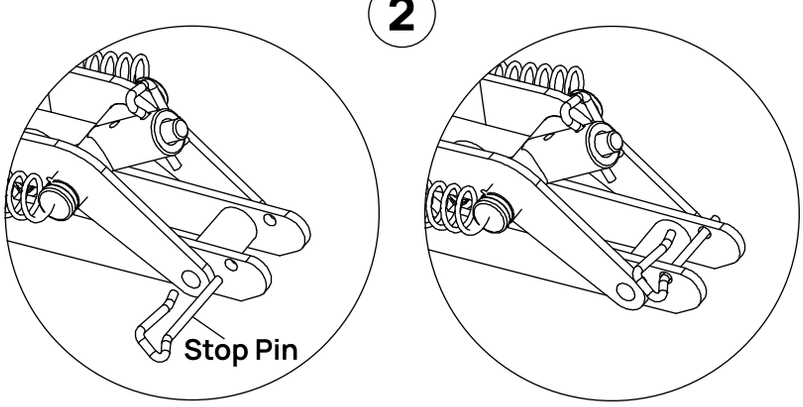

STEP

03

Replace any 2 sets of the manual vent openers with the assembled auto vent openers as shown.

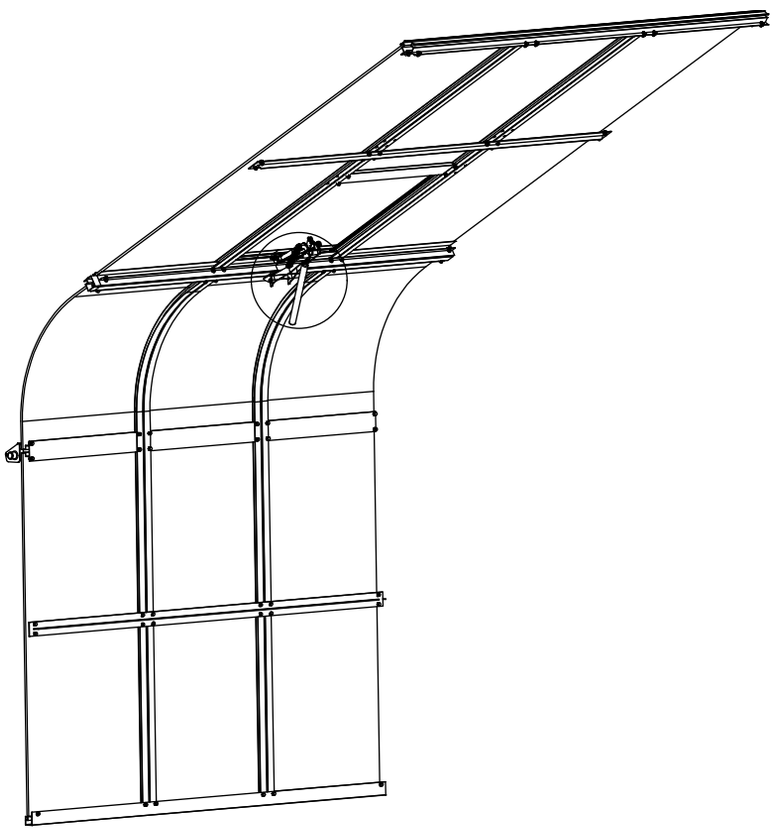

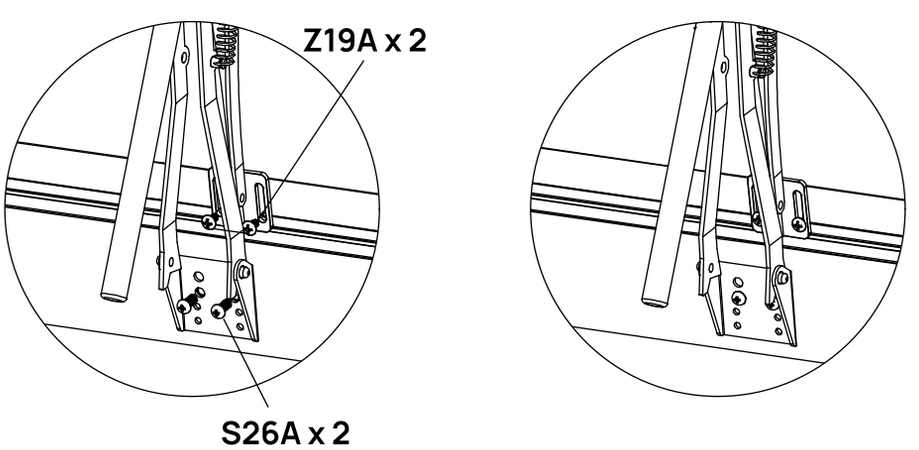

In case of sudden rain, strong winds, or other extreme weather while the auto vent opener is in the open position:
Push the frame arm inward as shown to release it from the bracket and quickly close the vent.
To secure it, tie the opener to a fixed point with a rope during storms to prevent the vent from being blown open.

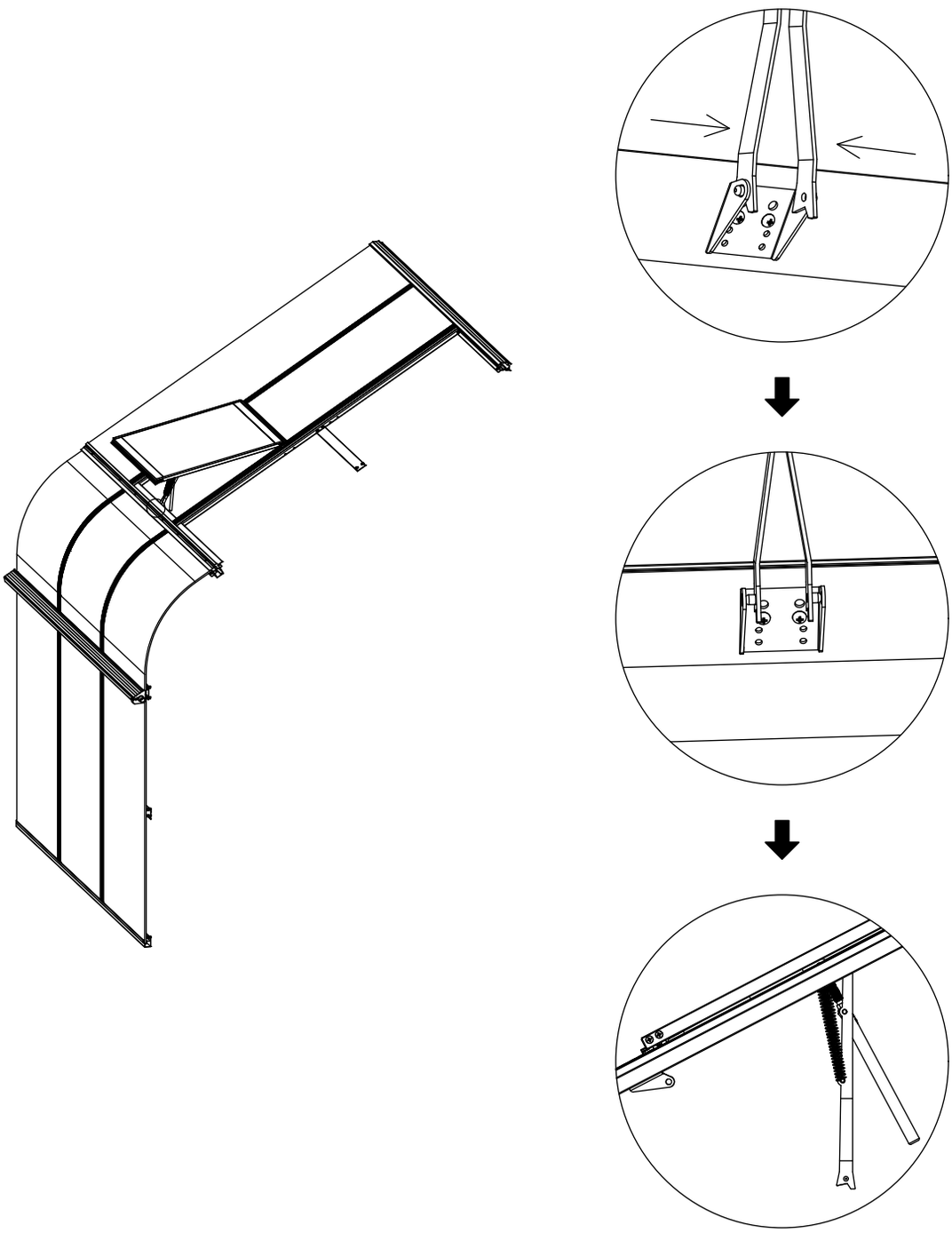

Door Assembly

Dutch Door Diagram

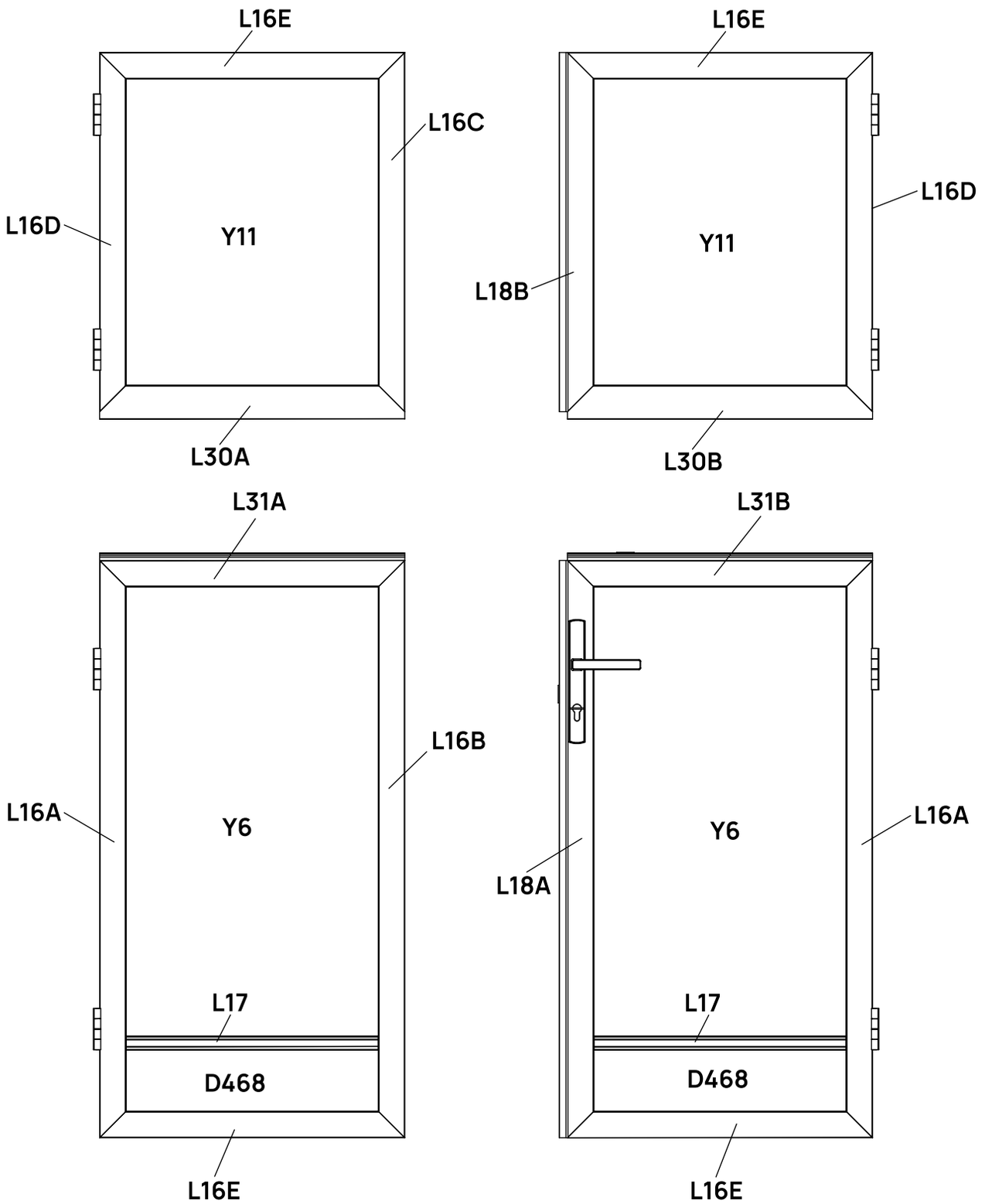

STEP

01

Assemble 4 sets of L16E pieces as shown, attach J193 pieces to each ends and secure with Z02A screws.

BOX	PART	NO	QTY
ALBOX-4		L16E	4
ALBOX-4		J193	8
ALBOX-4		Z02A Ø4X16D	16

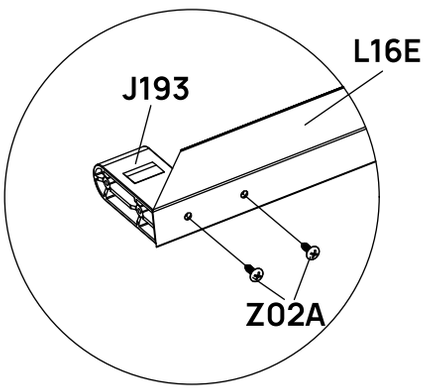

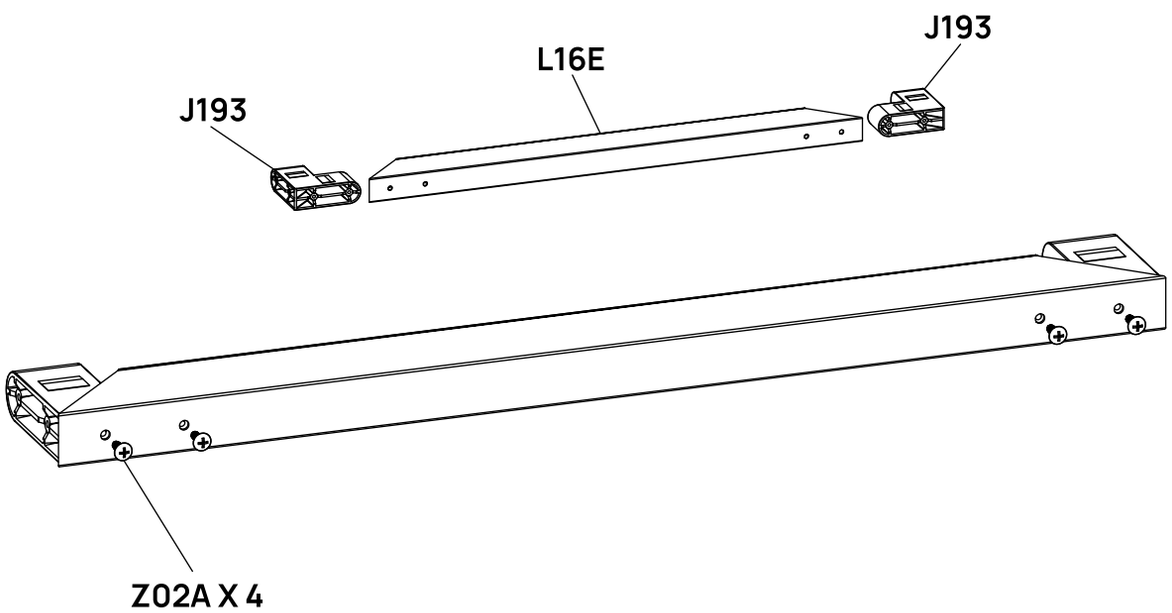

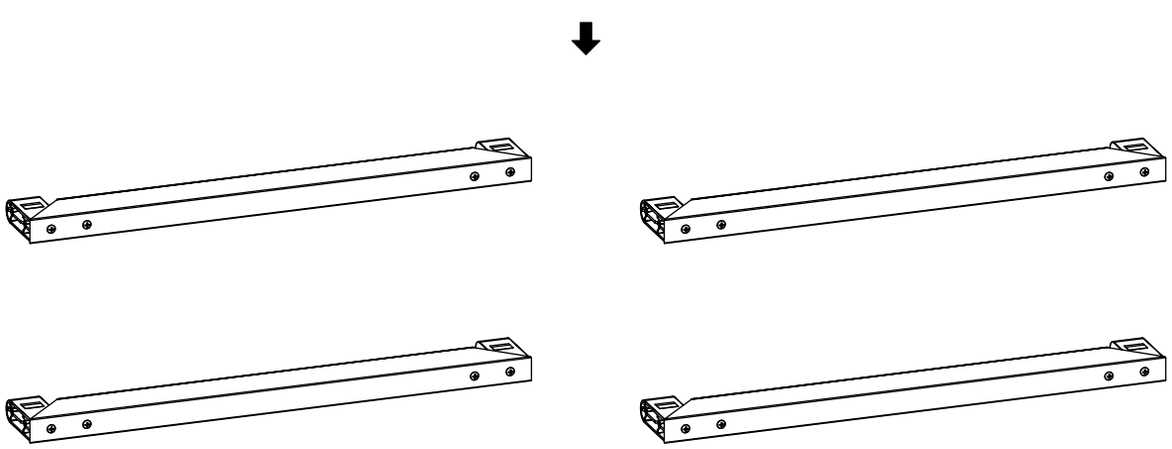

X4

STEP

02

Assemble L30A, L30B, L31A and L31B in the same way as shown.

BOX	PART	NO	QTY
ALBOX-4		L30A	1
ALBOX-4		L30B	1
ALBOX-4		L31A	1
ALBOX-4		L31B	1
ALBOX-4		J193	8
ALBOX-4		Z02A Ø4X16D	16

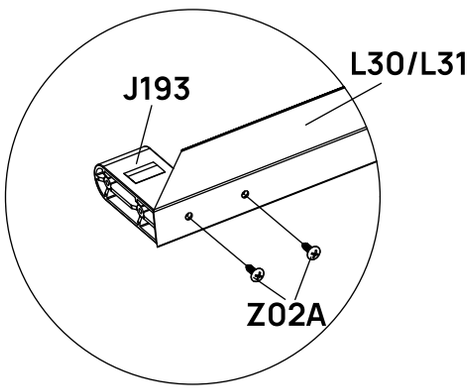

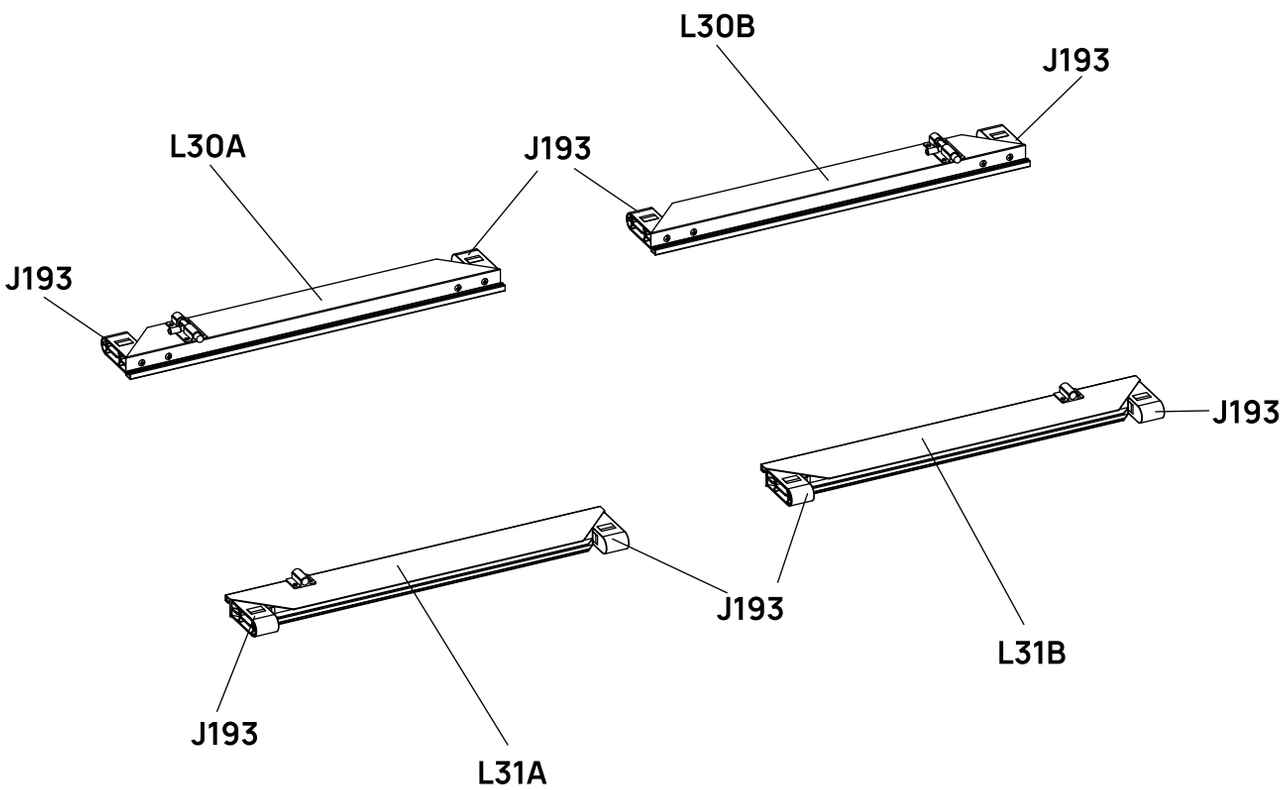

STEP

03

Assemble the upper-left door using Z02A screws, then attach the hinges as shown.

BOX	PART	NO	QTY
ALBOX-3		L16A	1
ALBOX-3		L16B	1
ALBOX-4		L16C	1
ALBOX-4		L16D	1
ALBOX-4		L17	1
ALBOX-4		Z02A Ø4X16D	16
ALBOX-4		S03A M6X10	2
ALBOX-4		M24 M6	2
PCBOX-3		Y11	1
PCBOX-3		Y6	1
PCBOX-2		H158	1
ALBOX-4		A51	4
Pre-installed		S27A M5X12	12
ALBOX-4		D468	1

Upper-left door

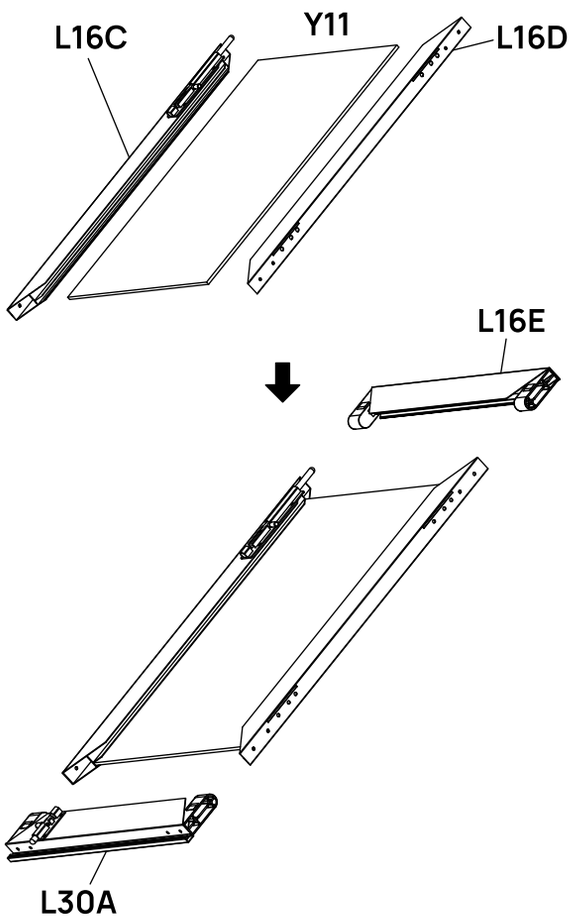

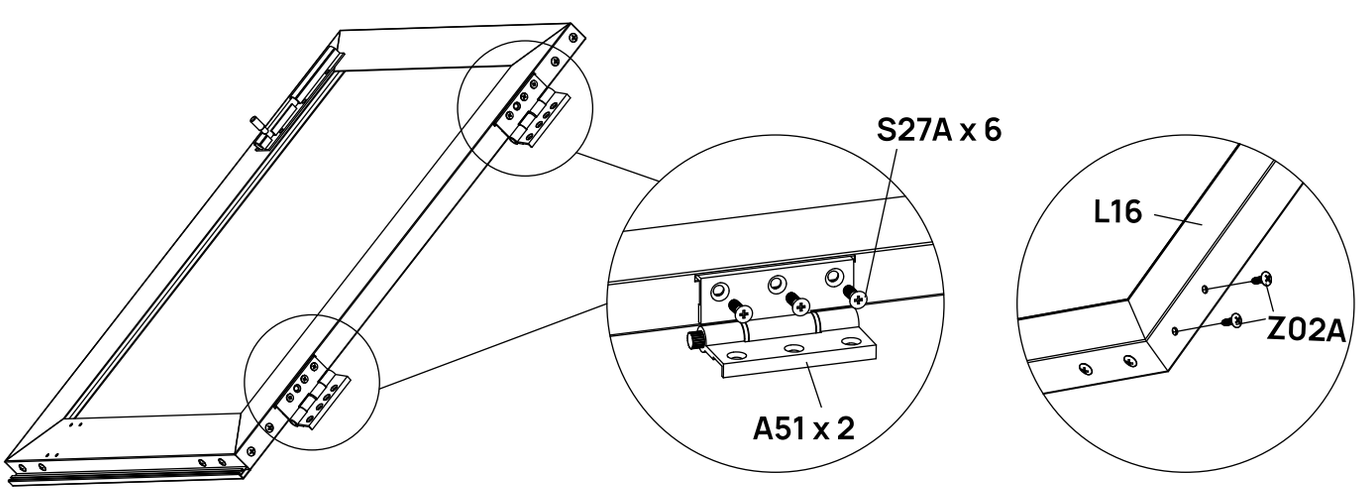

STEP

04

Assemble the lower-left door as shown, secure the L17 frame and D468 aluminum plate at the bottom.
Finally attach the hinges as shown.

Lower-left door

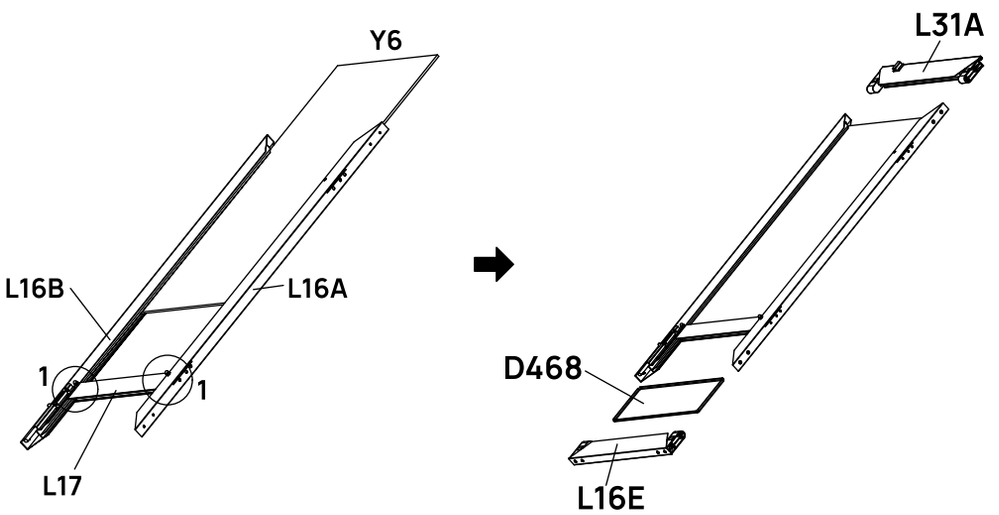

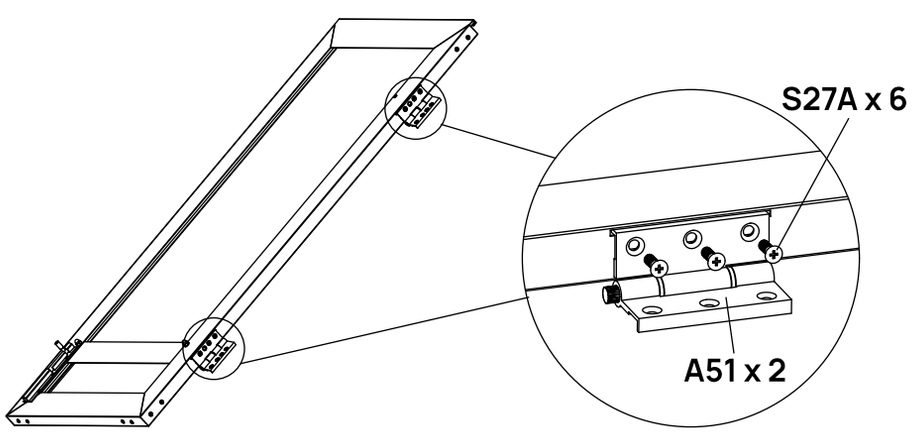

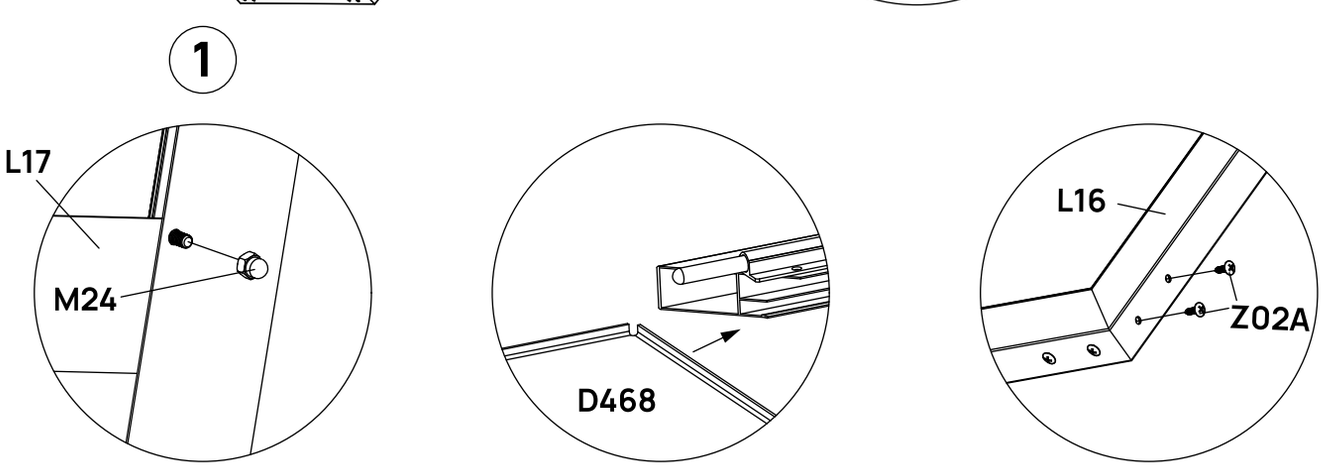

STEP

05

Assemble the upper-right door using Z02A screws, then attach hinges as shown.

BOX	PART	NO	QTY
ALBOX-3		L16A	1
ALBOX-4		L16D	1
ALBOX-3		L18A	1
ALBOX-4		L18B	1
ALBOX-4		L17	1
ALBOX-4		Z02A Ø4X16D	16
ALBOX-4		S03A M6X10	2
ALBOX-4		M24 M6	2
PCBOX-3		Y11	1
PCBOX-3		Y6	1
PCBOX-2		H158	1
ALBOX-4		A51	4
Pre-installed		S27A M5X12	12
ALBOX-4		D468	1

Upper-right door

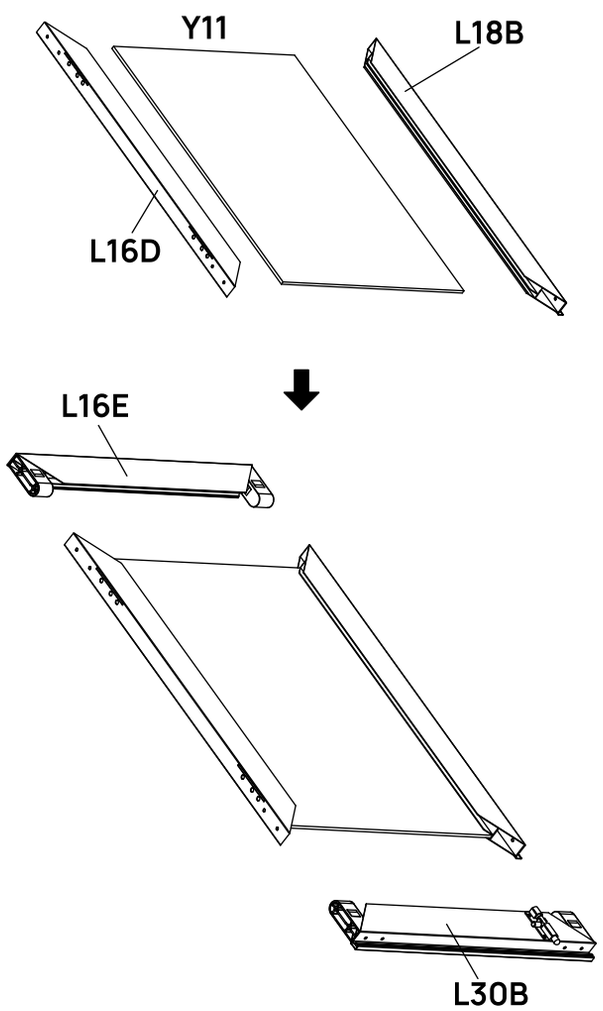

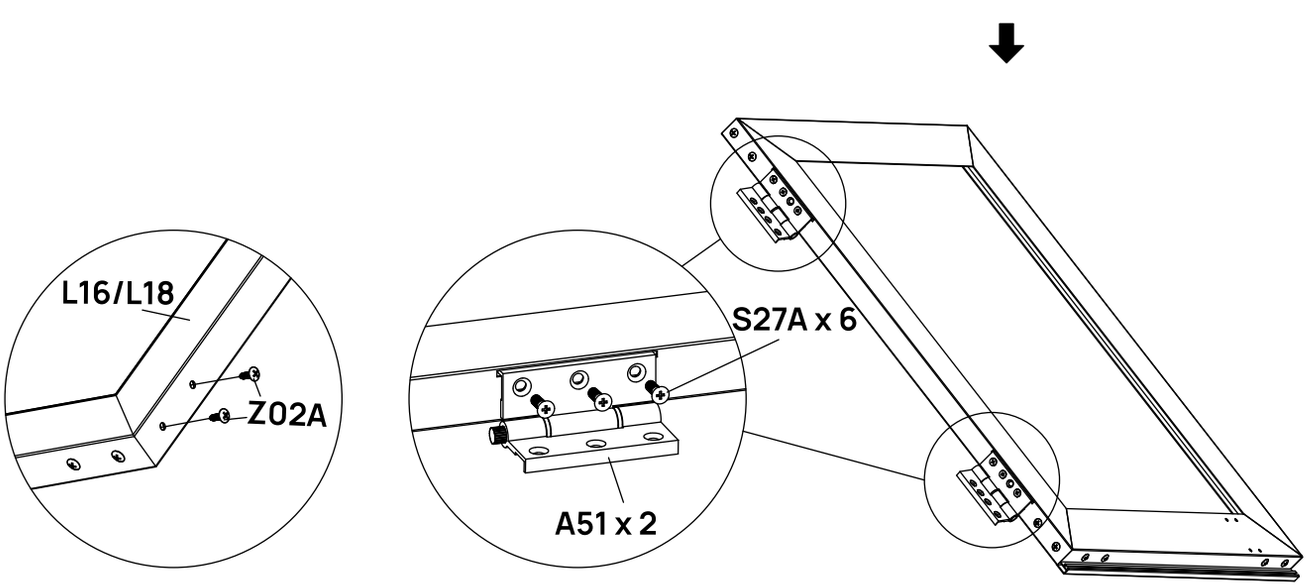

STEP

06

Assemble the lower-right door as shown, secure the L17A frame and D468 aluminum plate at the bottom.
Finally attach the hinges as shown.

Lower-right door (with lock holes)

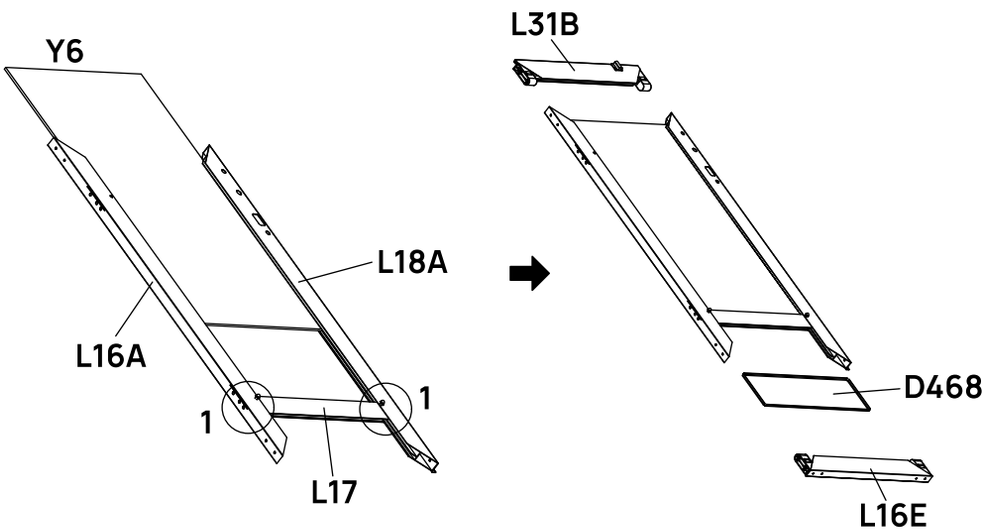

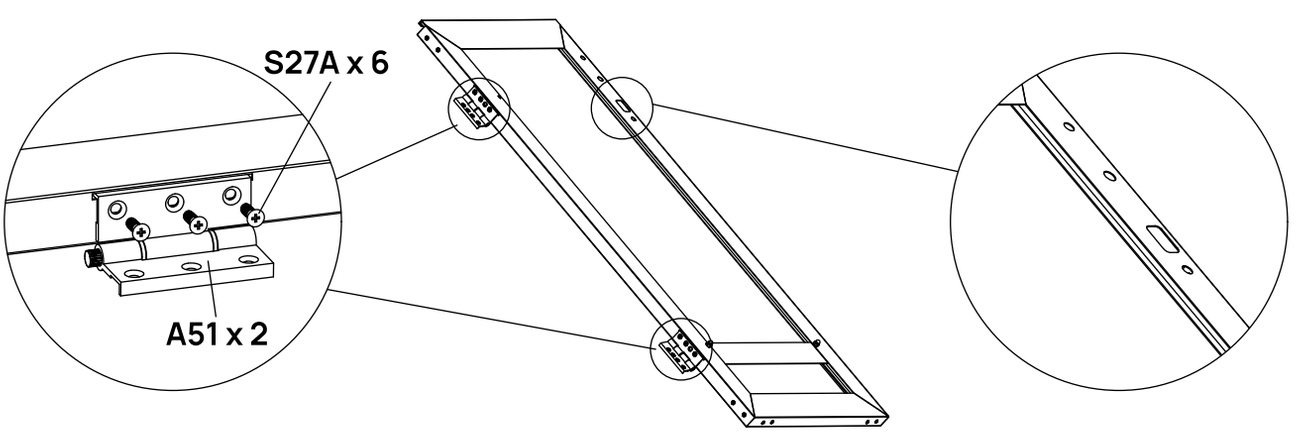

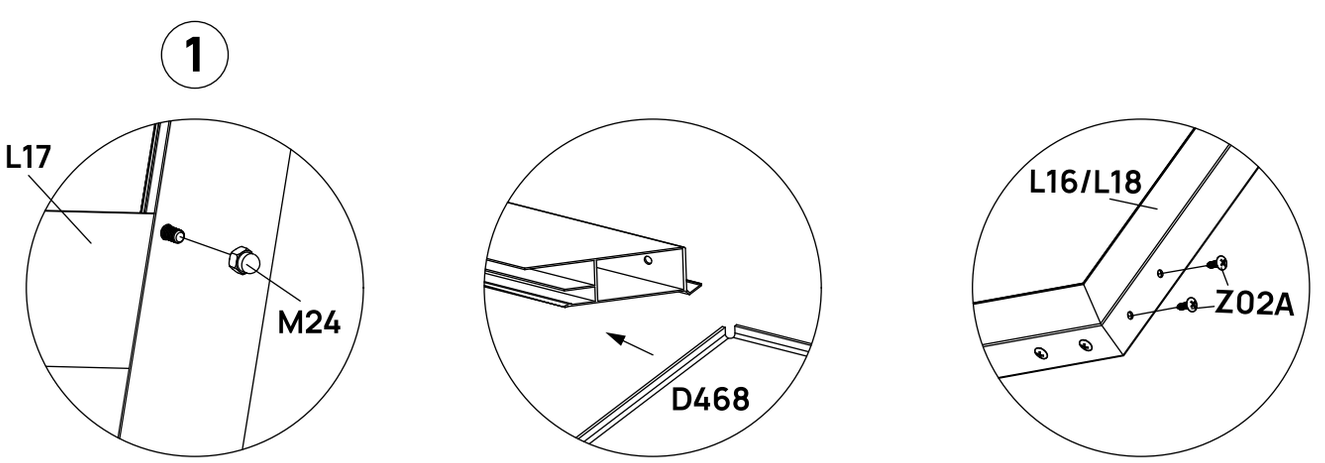

STEP

07

Remove S27A bolts from the L03 door frames. Hold the door in place, affix the hinges to the door frames, and secure them with S27A bolts. Finally, reinforce the structure with Z17A screws.

BOX	PART	NO	QTY
		DOOR-L	1
		DOOR-R	1
ALBOX-4		Z17A M4.8X16	16
Pre-installed		S27A M4.8X16	24

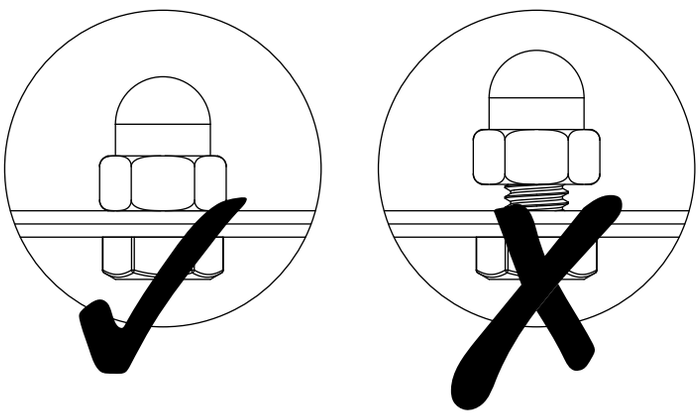

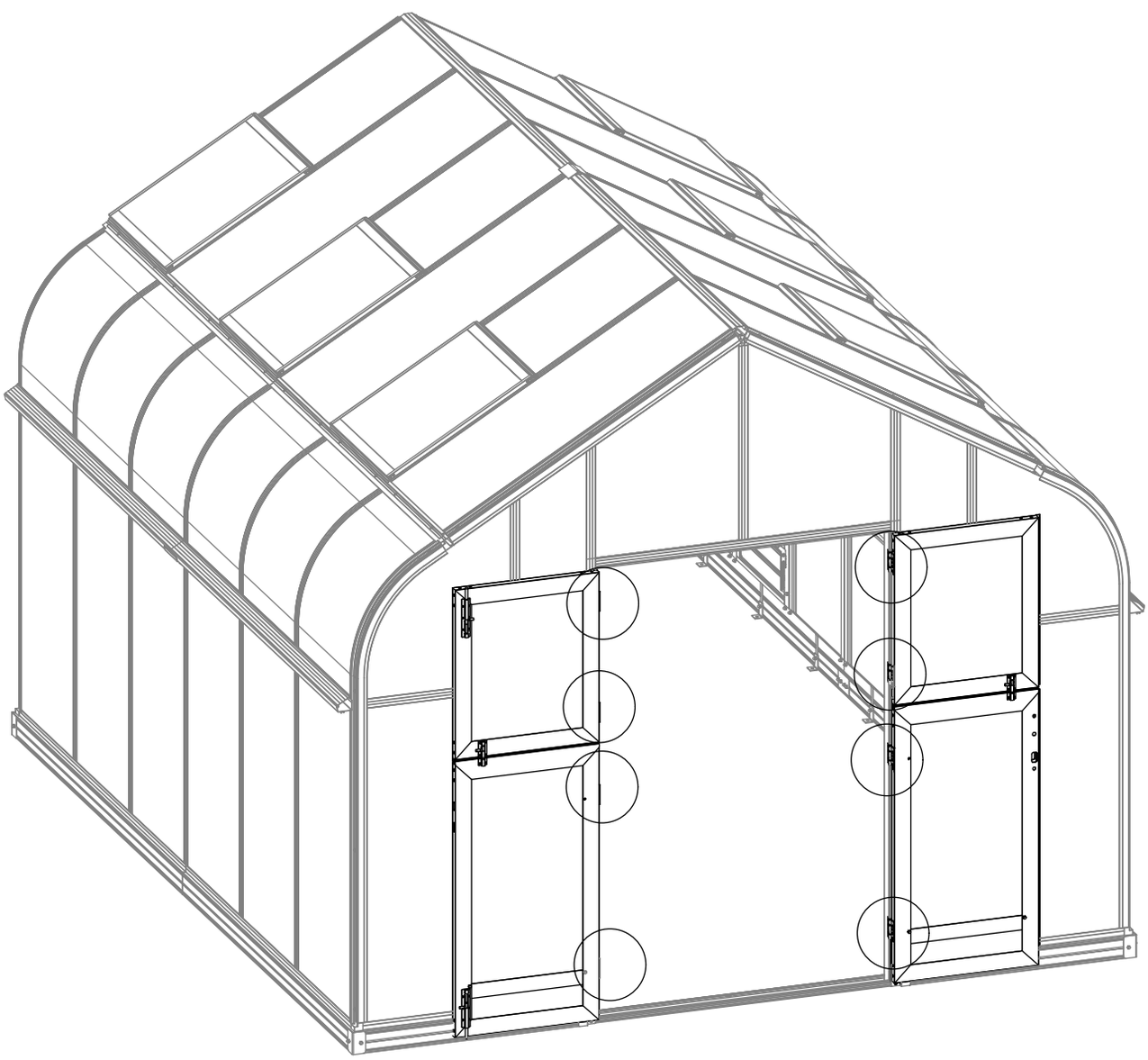

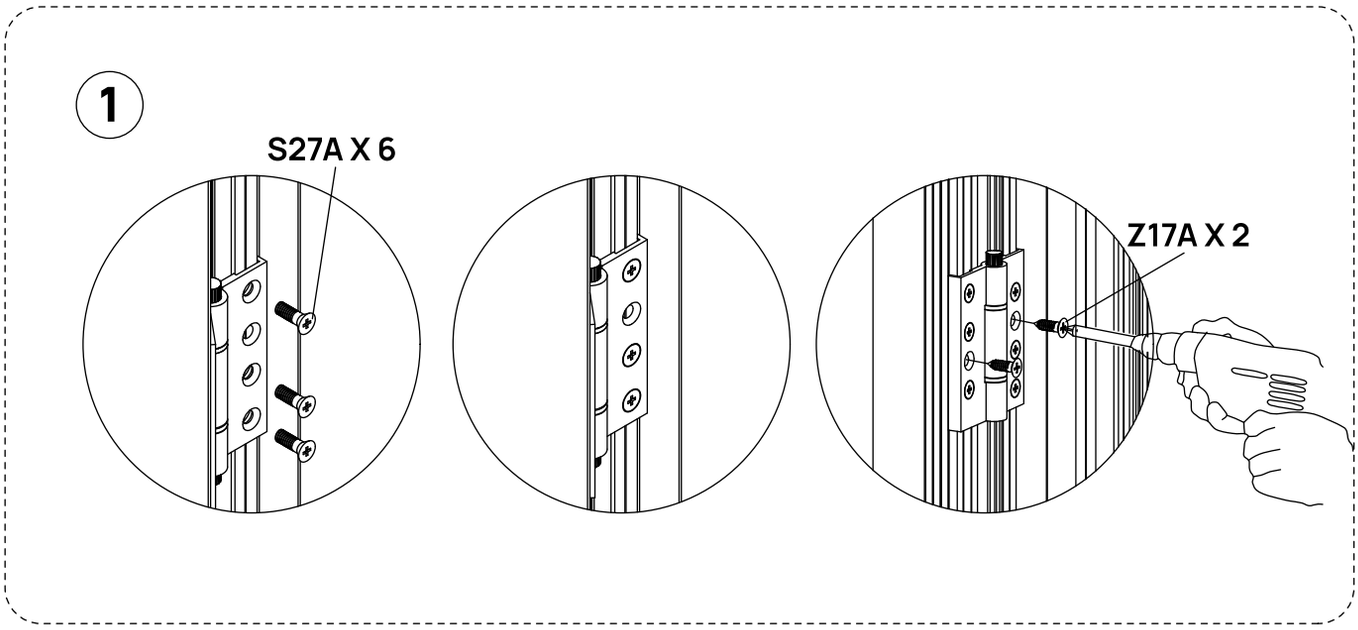
1
S27A X 6
Z17A X 2

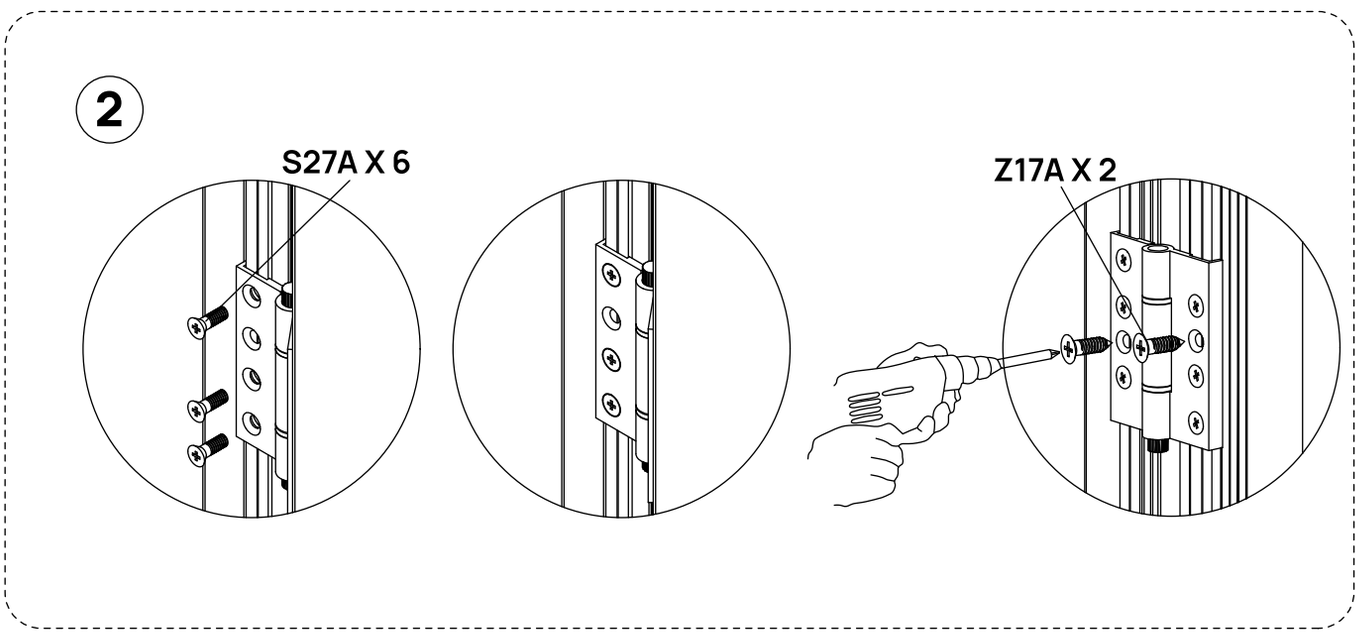
2
S27A X 6
Z17A X 2

STEP

08

Lock installation.

BOX	PART	NO	QTY
ALBOX-3		H199	1

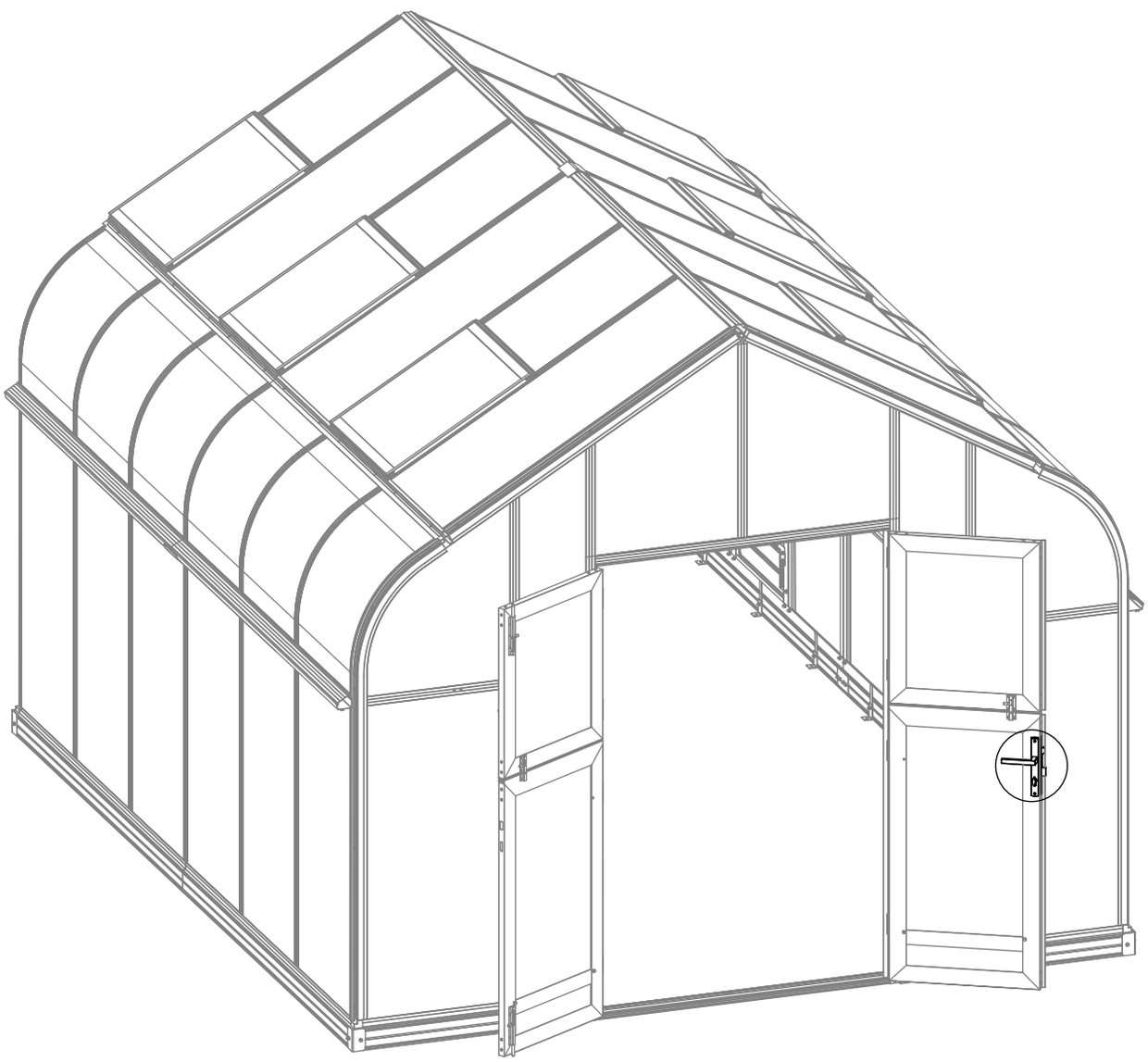

Disassemble the door lock and install it onto the right door. Make sure the keyhole faces outward and the handle rests horizontally as shown.

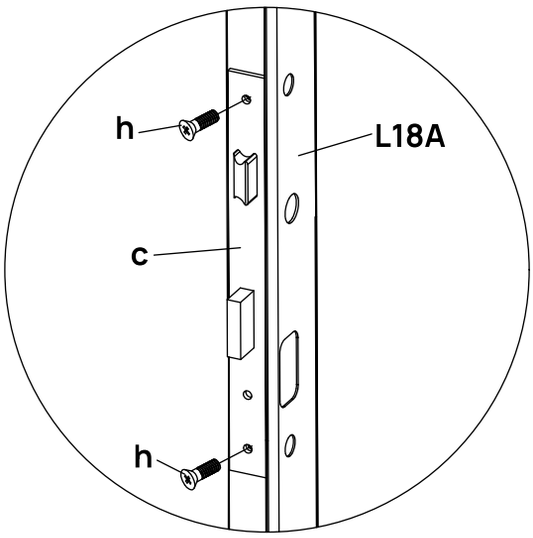

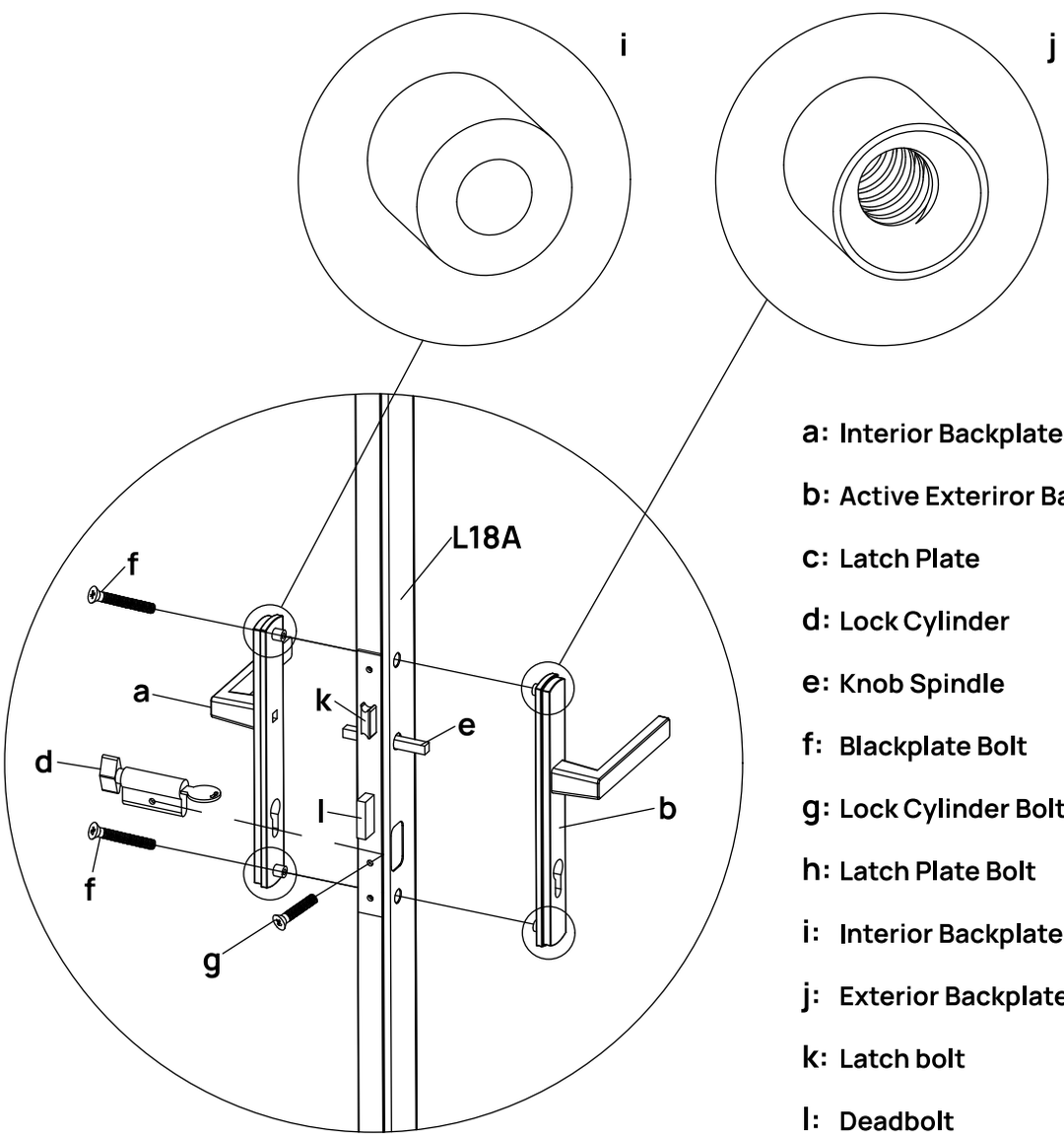

a: Interior Backplate with handle

b: Active Exteriror Backplate with handle

c: Latch Plate

d: Lock Cylinder

e: Knob Spindle

f: Blackplate Bolt

g: Lock Cylinder Bolt

h: Latch Plate Bolt

i: Interior Backplate Nut

j: Exterior Backplate Nut with thread

k: Latch bolt

l: Deadbolt

STEP

09

Insert J280 caps to both ends of the door frames as shown.

BOX	PART	NO	QTY
ALBOX-4		J280	8

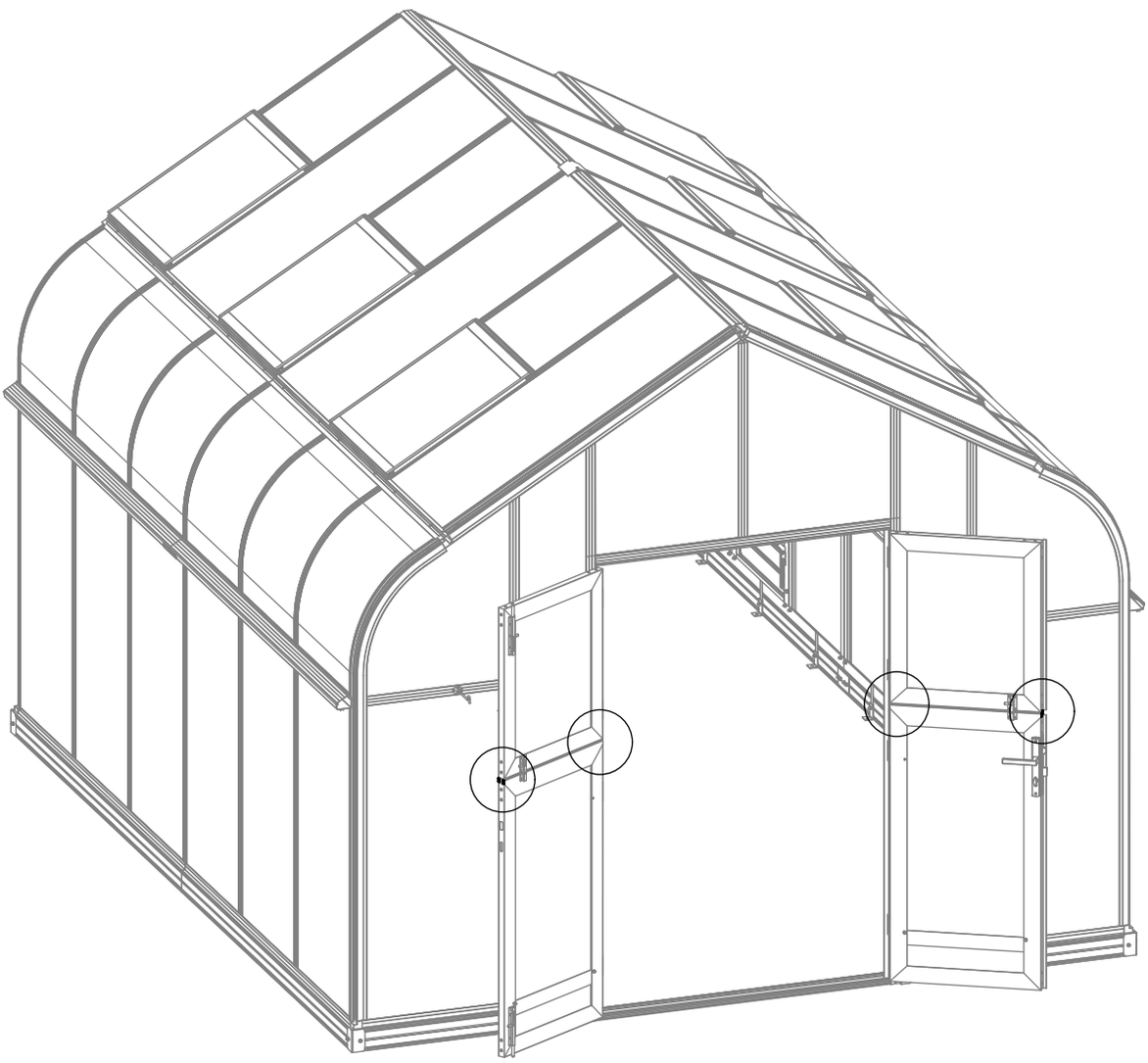

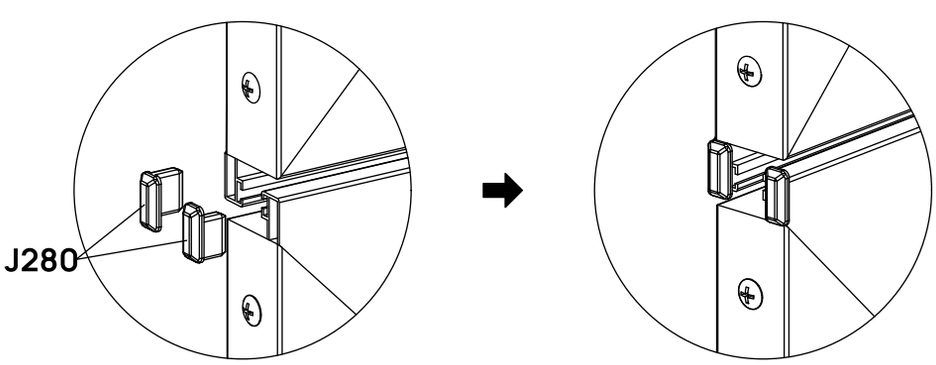

The upper doors can be opened separately by unlocking the barrel bolt latches.

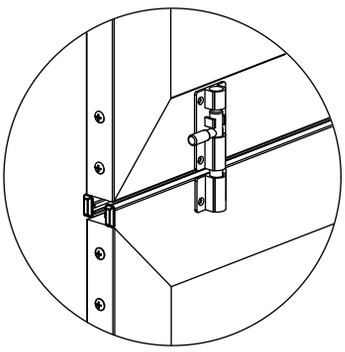

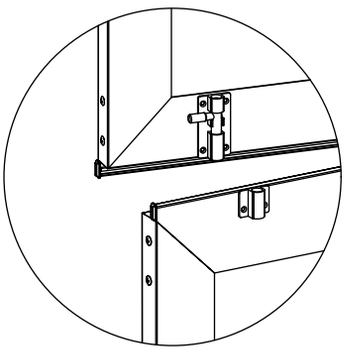

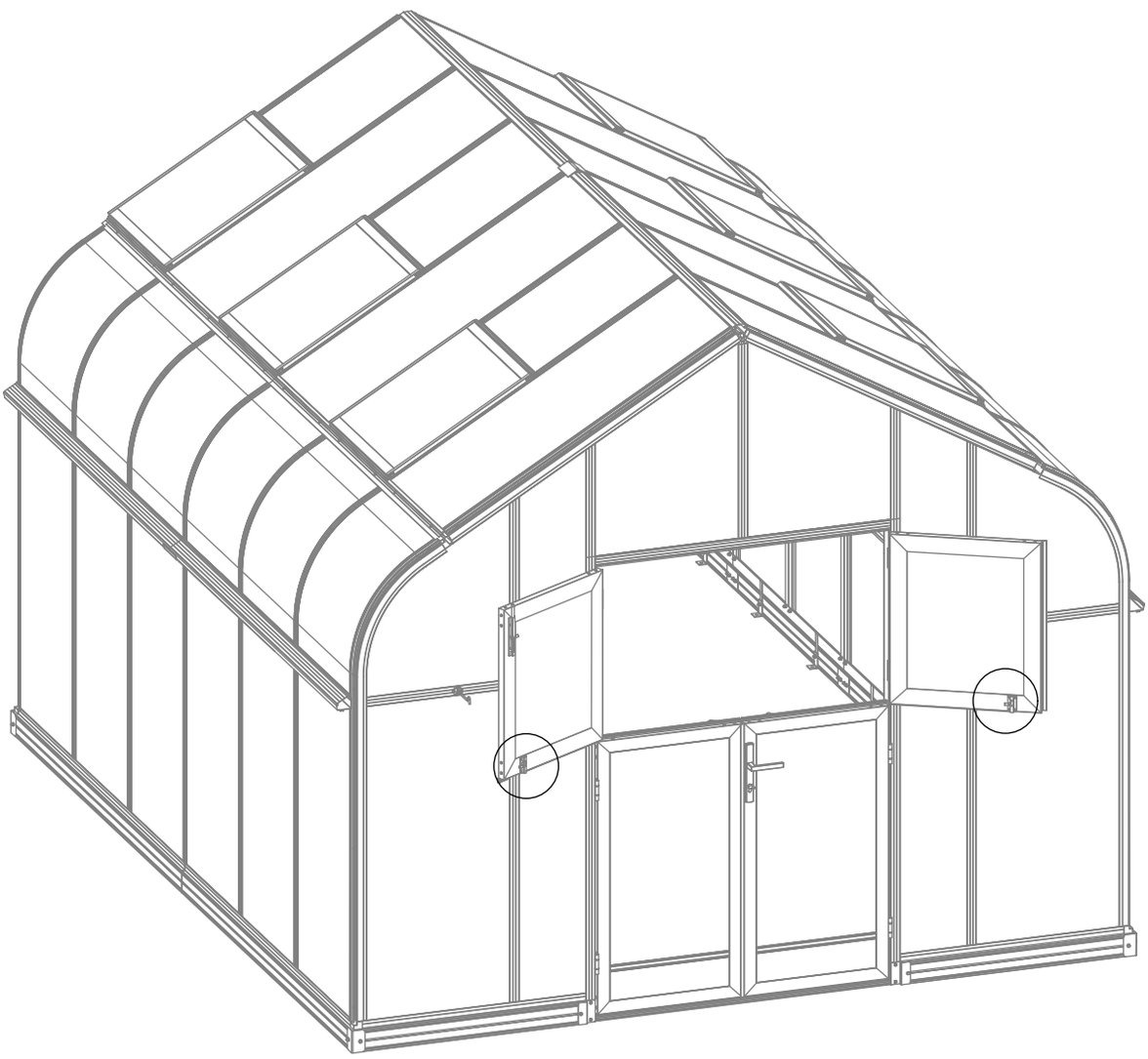

End Cap Installation

STEP
01

Attach ridge end caps, eave end caps and gutter end caps as shown.

BOX	PART	NO	QTY
ALBOX-4		J198	2
ALBOX-4		J266L	2
ALBOX-4		J266R	2
ALBOX-4		J267L	2
ALBOX-4		J267R	2
ALBOX-4		Z08A M4.2X16	12
ALBOX-4		S03A M6X10	4
ALBOX-4		M24 M6	4

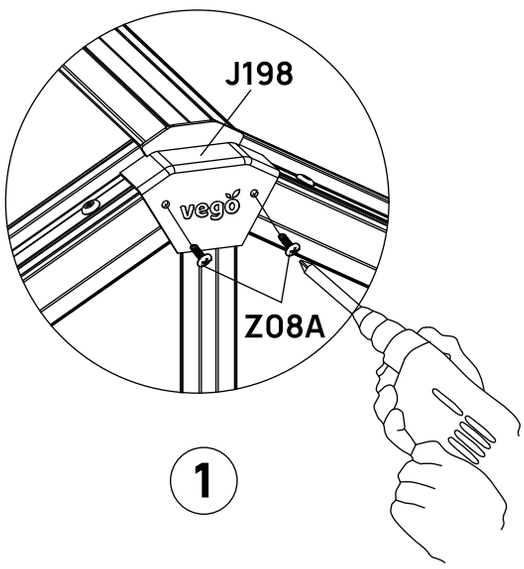

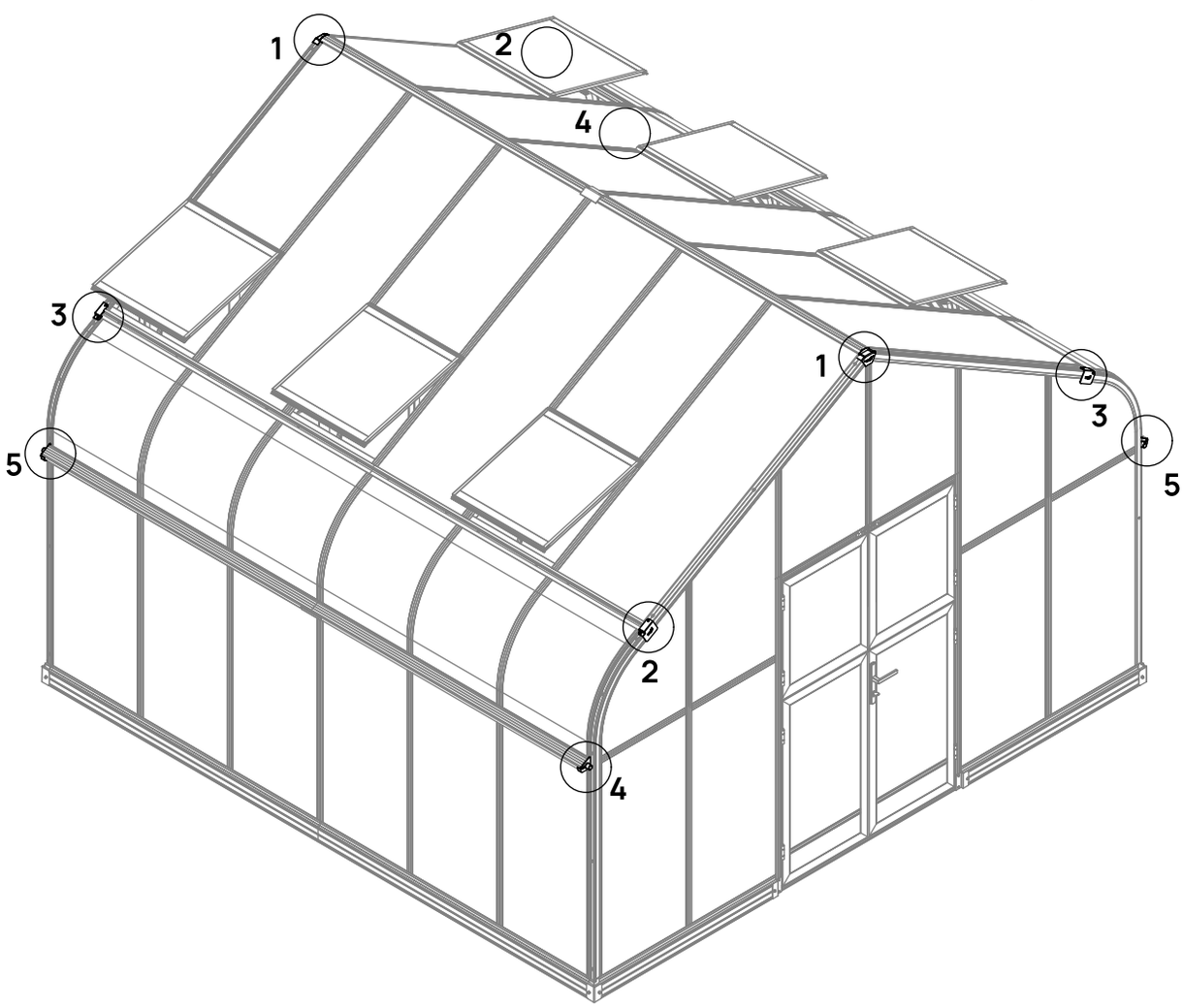

2

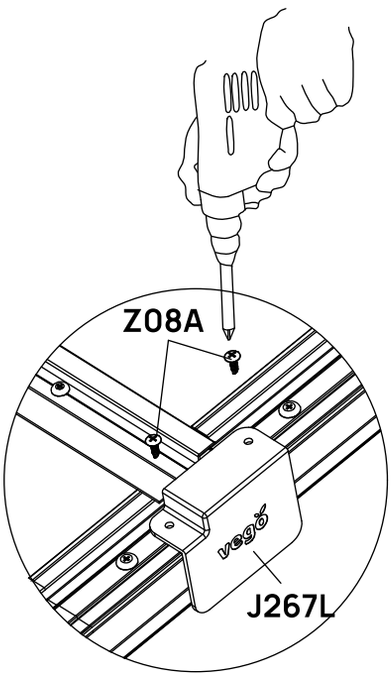

3

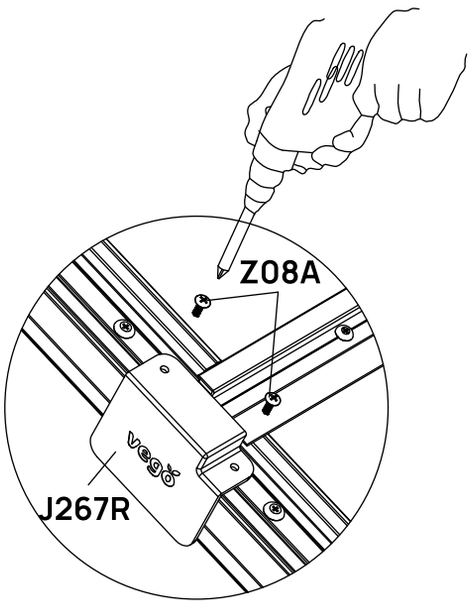

4

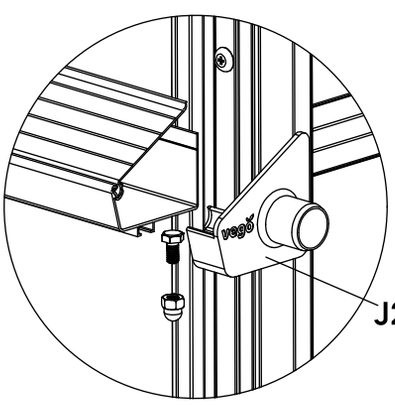

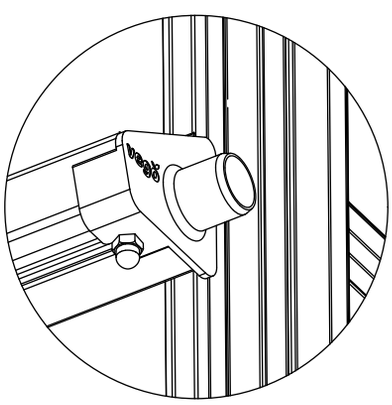

5

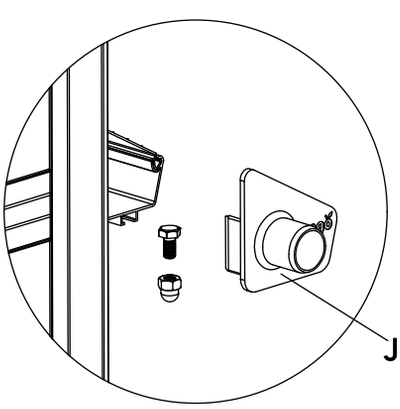

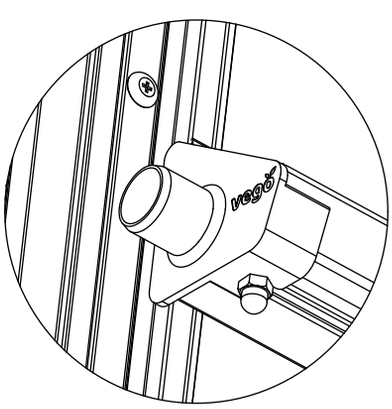

STEP

02

Assemble the drainage pipes as shown, then attach them to the gutter end caps.
Apply silicone caulk or waterproof tape to reinforce the connection between gutter end cap and pipe.

BOX	PART	NO	QTY
ALBOX-4		L25	4
ALBOX-4		J93	4
ALBOX-4		J94	4
ALBOX-4		J199	4
ALBOX-4		H74-3	2
ALBOX-4		H74-2	2
Pre-installed		S89 M3X12	8
ALBOX-4		Z08A Ø4.2X16	4

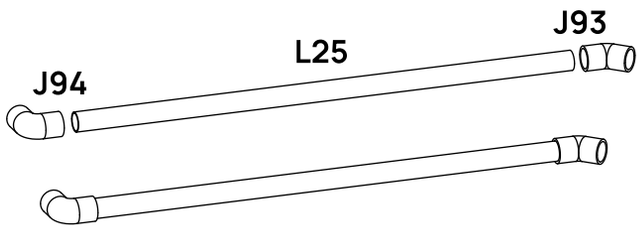

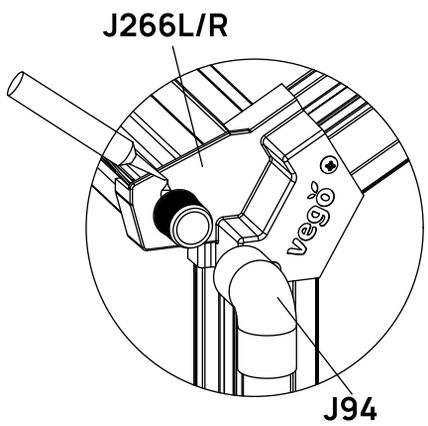

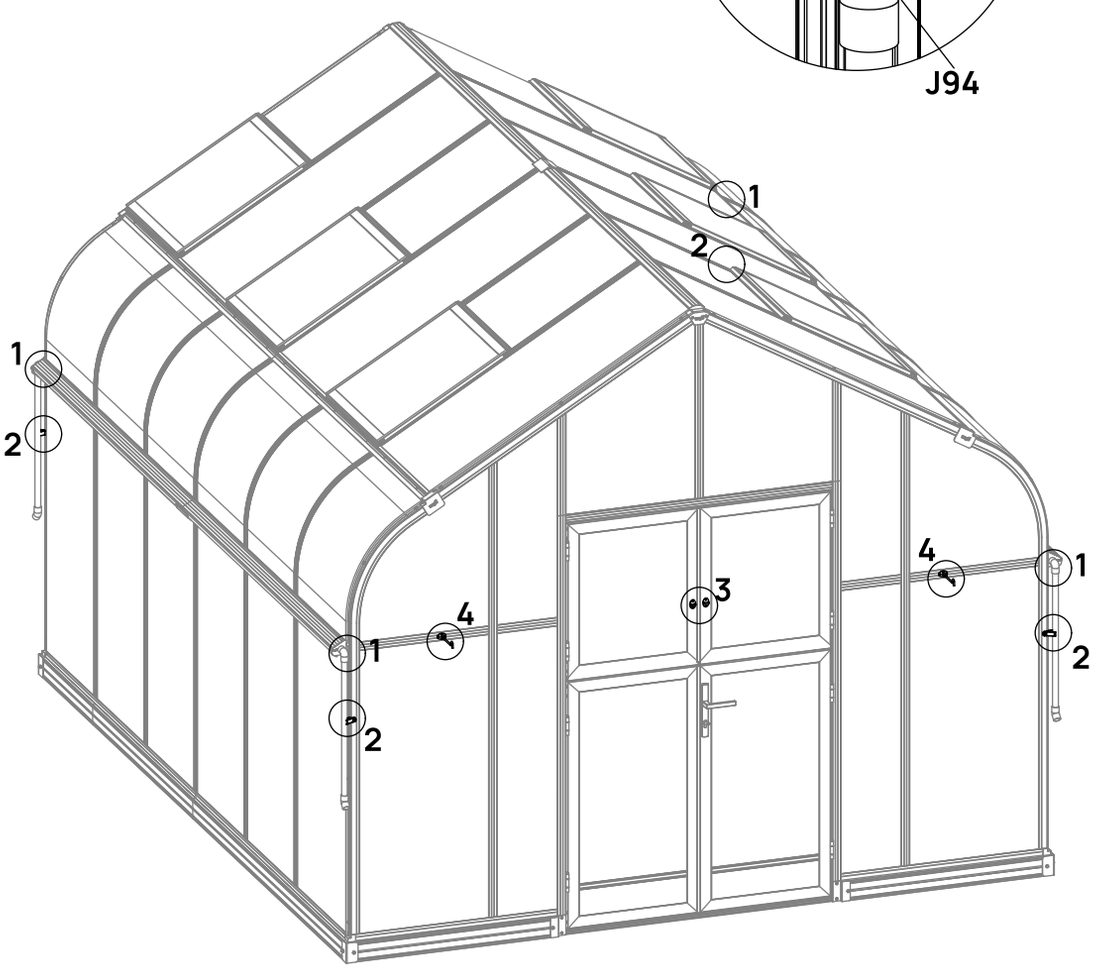

Apply silicone caulk (not provided) between the gaps of plastic caps and frames to ensure a watertight seal as shown.

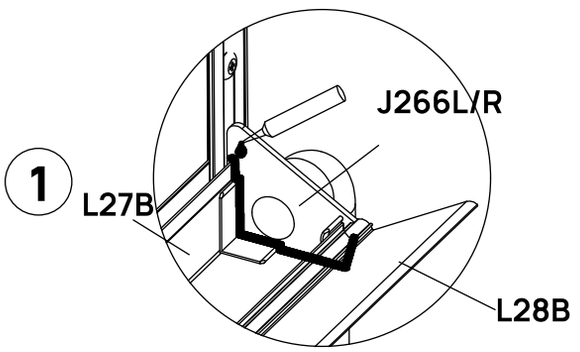

Attach pipe brackets and wind latches as shown in the diagram.

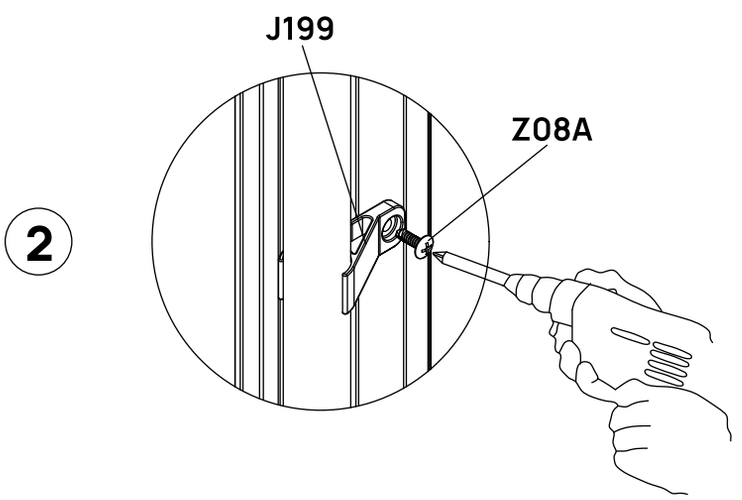

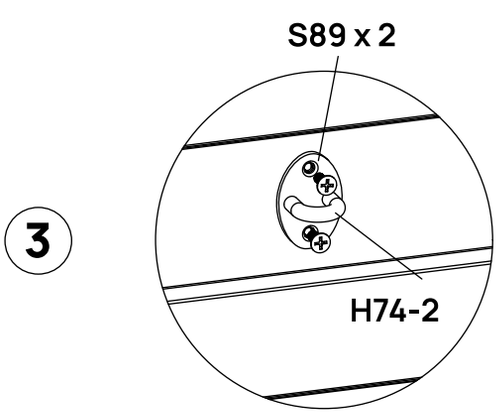

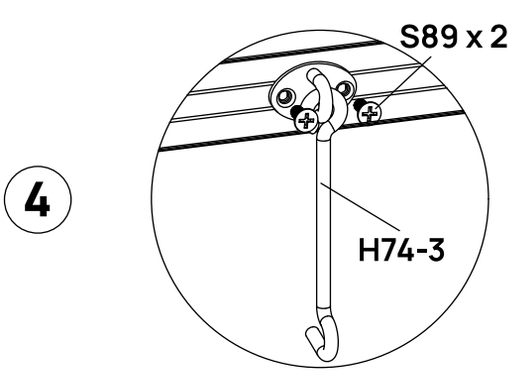

STEP

03

Apply silicone caulk (not provide) around all PC panels to ensure watertight sealing.
Note: For the roof, ensure to seal the joints between each profiles as well, using silicone caulk or the provided H231 butyl tape.

BOX	PART	NO	QTY
PCBOX-2		H231	1

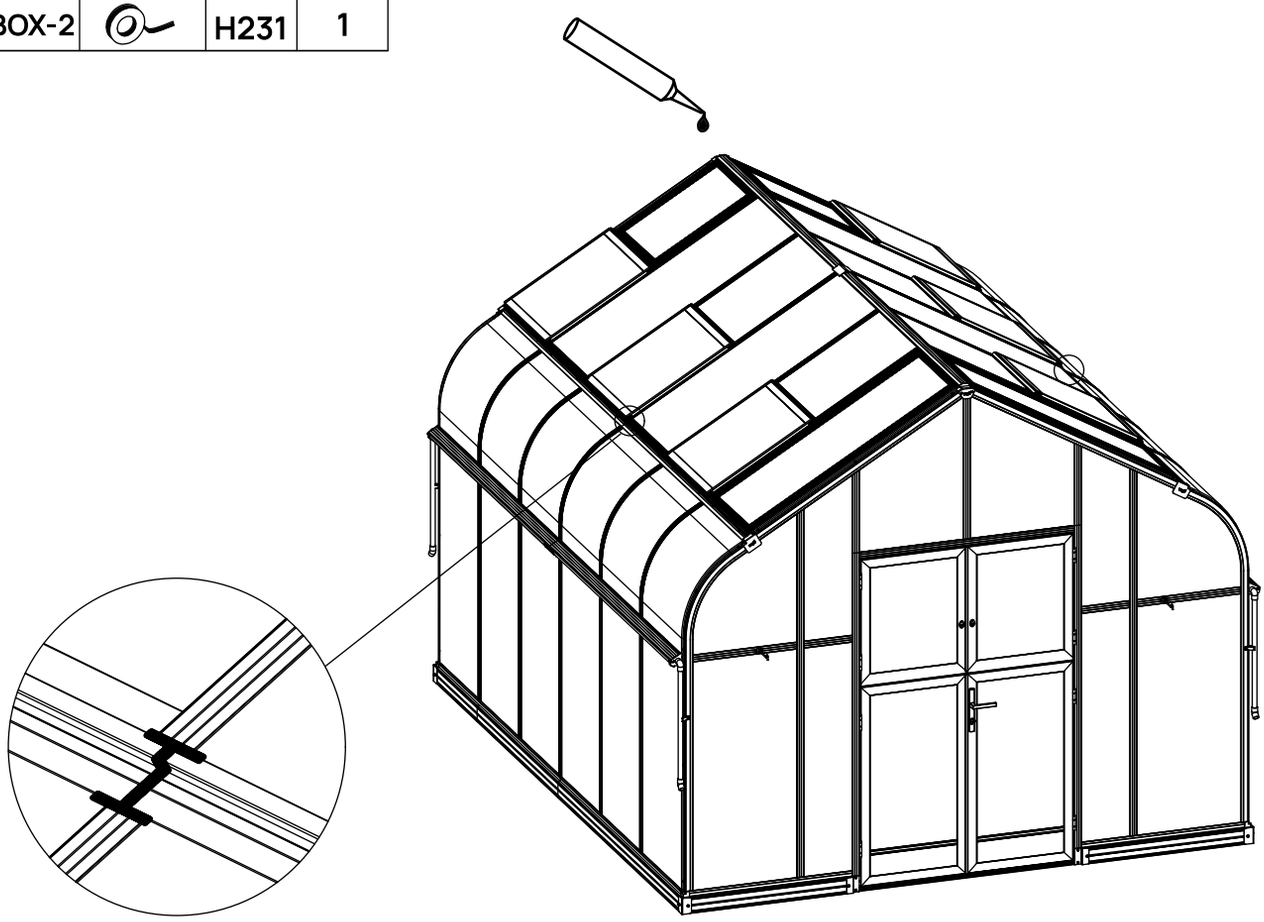

Perform a final inspection of your greenhouse and ensure that all nuts are securely tightened.

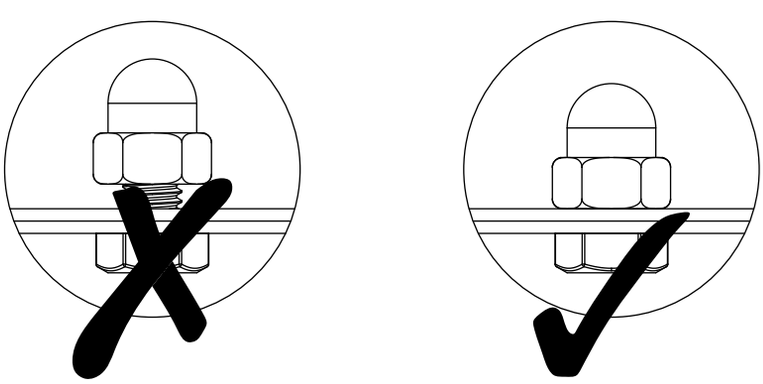

Gardening Made Easier. Anytime, Anywhere.

Contact Us

+1 (866) 597-1888
Vego Garden Academy
hello@vegogarden.com
vegogarden.com
vego_garden
Houston, TX